NEVADA 4 DOOR 2 DRAWER WARDROBE ASSEMBLY INSTRUCTIONS

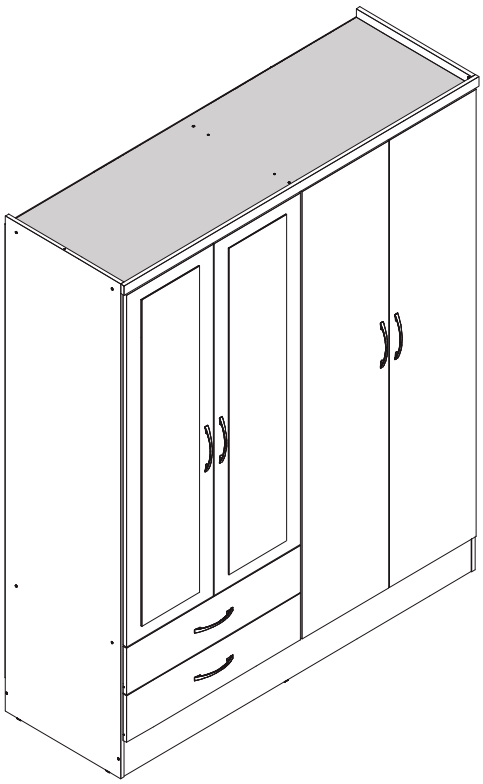

IMPORTANT

FOR DOMESTIC USE ONLY

PLEASE READ BEFORE YOU CONTINUE FURTHER

CARE AND MAINTENANCE

After unpacking this product please keep the original packaging in case it needs to be returned for any reason.

- Please ensure all fittings and parts are present before commencing with assembly.
- Never drag or push products as this could cause damage to the joints making it inferior.
- We strongly recommend that you keep children away from your work area.
- We recommend that you lay a blanket or sheet on the floor to avoid damage to both your floor and the product.
- Assemble this product as close to its final position as possible.
- Do not place this product next to a radiator or in direct sunlight.
- Do not drag or push items across your high gloss furniture as this may cause the surface to scratch
- Wood is a natural product and may expand if subjected to damp and may shrink or crack if subjected to heat. Therefore it is recommended that room temperature is maintained, with no sudden temperature fluctuations.
- Make sure any spillage is wiped off immediately.
- Do not place hot or chilled items directly on to the surface, use a place mat or marking will occur.
- For general cleaning use a soft cotton or micro fibre cloth, and do not use detergents of any kind.
- From time to time it may be necessary to tighten fittings, regular inspections should be carried out.
- Do not place on a wet or damp floor as staining may occur to your floor.

TOOLS REQUIRED

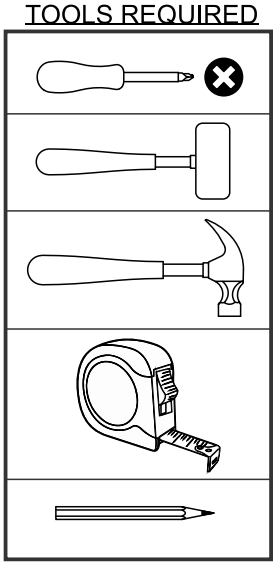

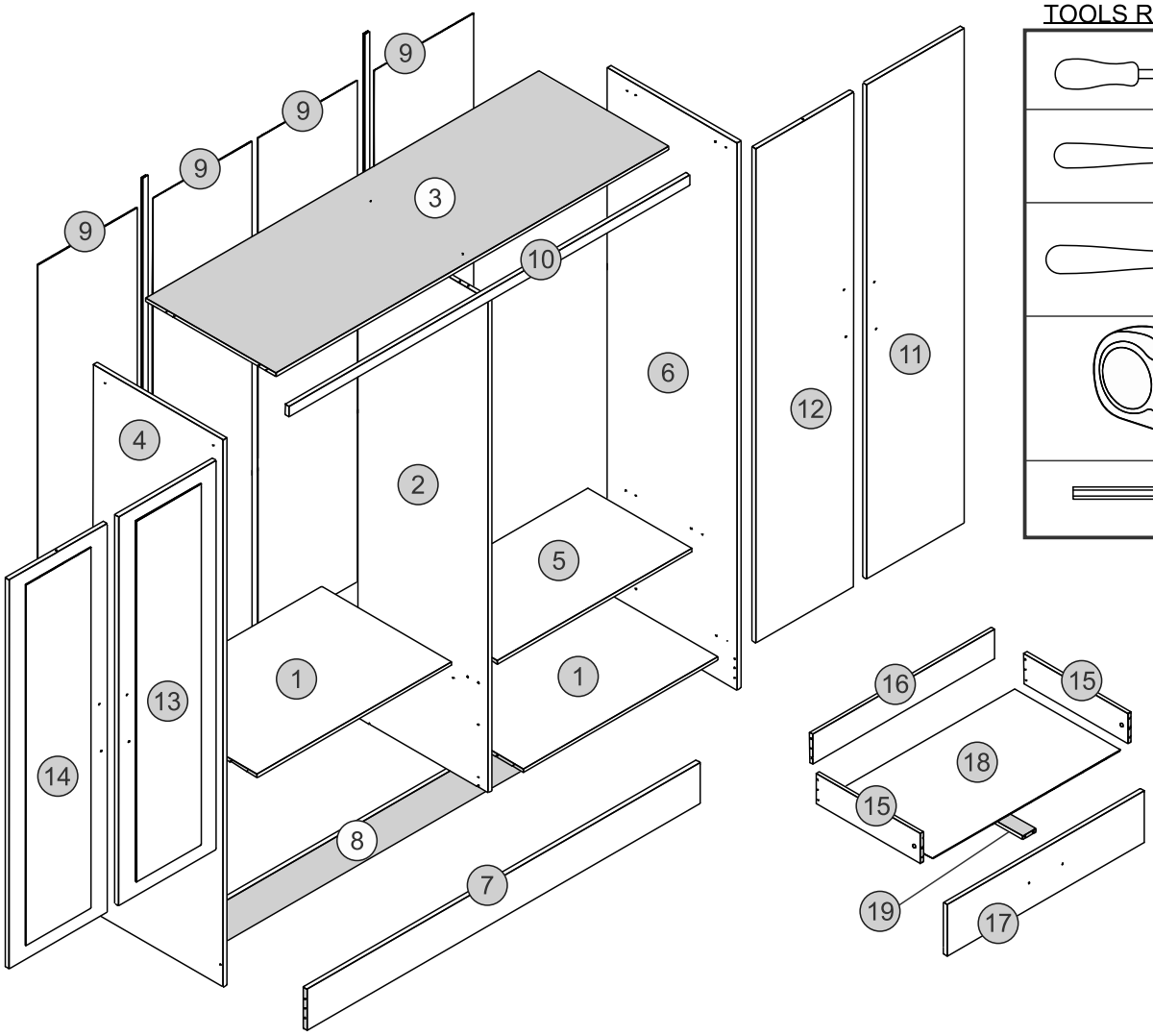

Please Note:
The below parts have all been stamped with the part number to help identify them during assembly.

Part Number	Part Description	Quantity	Carton
01	Base Panel	2	1/3
02	Division Panel	1	2/3
03	Top Panel	1	2/3
04	Left Side Panel	1	1/3
05	Shelf	1	1/3
06	Right Side Panel	1	1/3
07	Front Baseboard	1	2/3
08	Back Baseboard	1	2/3
09	Back Panel	4	2/3
10	Frame	2	2/3
11	Right Large Door	2	3/3
12	Left Large Door	1	3/3
13	Right Small Door	1	3/3
14	Left Small Door	1	3/3
15	Drawer Side	4	1/3
16	Drawer Back Panel	2	1/3
17	Drawer Front	2	2/3
18	Drawer Bottom	2	2/3
19	Drawer Bottom Support Bar	2	2/3

FITTINGS LIST

A Flat Head Screw Ø6,0 x 10mm (8x) +/1	**B** Flan Head Screw Ø4,0 x 14mm (12x) +/2	**C** Flat Head Screw Ø4,0 x 14mm (68x) +/2	**D** Flan Head Screw Ø4,0 x 20mm (12x) +/2
E Flat Head Screw Ø3,5 x 40mm (4x) +/1	**F** Flat Head Screw Ø4,0 x 50mm (26x) +/2	**G** Dowel Ø6,0 x 30mm (46x) +/2	
H Nail 10 x 10 (100x) +/2	**I** Back Panel Bracket (16x) +/2	**J** 'L' Metallic Support (10x) +/2	**K** Washer (4x) +/1
L Plastic Foot (6x) +/1	**M** Hanging Rail Support (4x)	**N** Flan Head Screw Ø3,5 x 30mm (2x) +/1	**O** Hinge (12x)
P Hinge Plate (12x)	**Q** Drawer Runners (2x)		
R Back Panel Strip (2x)	**S** Strap (2x)	**T** Handle (6x)	
U Hole Plugs (26x) +/2	**V** Glue (2x)	**W** Cam Nut (4x) +/1	**X** Cam Bolt (4x) +/1
Y Hanging Rail (2x)	**Z** Flat Head Screw Ø4,0 x 12mm (28x) +/2	**A1** Door Support (4x)	
B1 Hole Plugs Líneo 19mm (4x) +/2			

TIPS FOR FITTINGS CAM-LOCKS

WHEN FITTING CAM NUT. ENSURE STARTING POSITION IS CORRECT BEFORE YOU INSERT CONNECTING CAM BOLT TURN CLOCKWISE UNTIL SECURE

CORRECT WRONG

Cam bolt head needs to be in centre

CAMBOLT

Tighten until shoulder in flush with panel. Do not overtighten or undertighten (see example beside)

Shoulder

Panel **Panel**

STEP 1

PARTS REQUIRED

4 - LEFT SIDE PANEL	x1

HARDWARE REQUIRED

C	Ø4,0 x 14mm	08
H		02
L		02
M		01
P		03

TOOLS REQUIRED

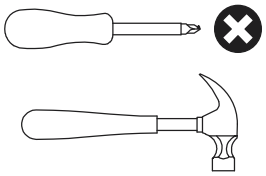

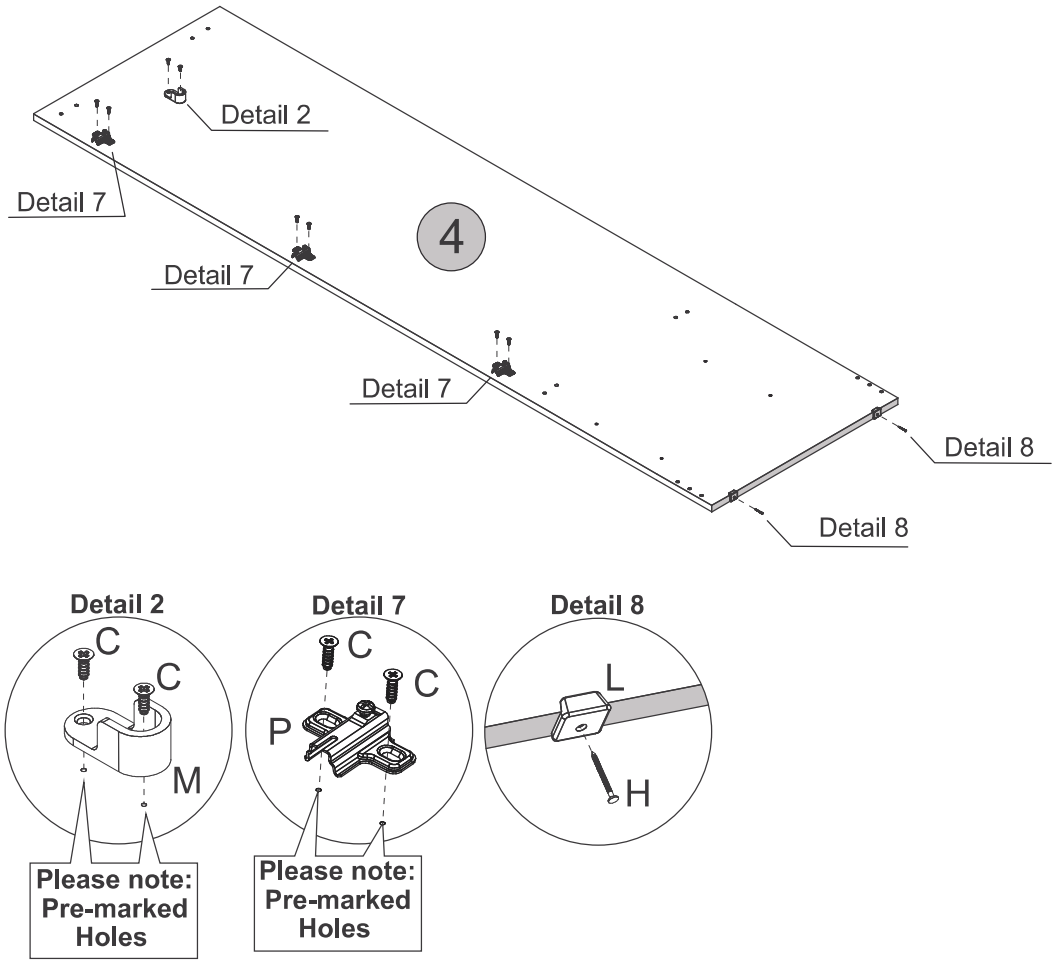

STEP 2

PARTS REQUIRED

4 - LEFT SIDE PANEL	x1

HARDWARE REQUIRED

A	Ø6,0 x 10mm	04
Q	Left	02

TOOLS REQUIRED

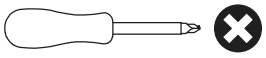

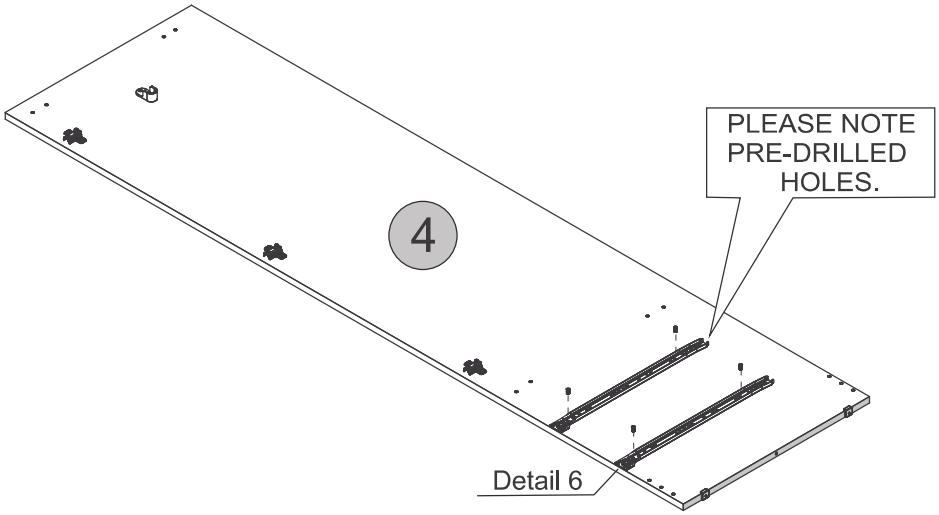

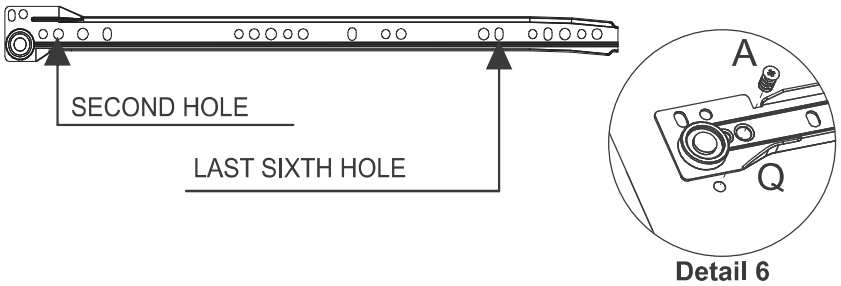

STEP 3

PARTS REQUIRED

2 - DIVISION PANEL	x1

HARDWARE REQUIRED

C	Ø4,0 x 14mm	08
G	Ø6,0 x 30mm	02
M		01
P		03
V	Glue	01

TOOLS REQUIRED

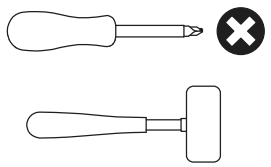

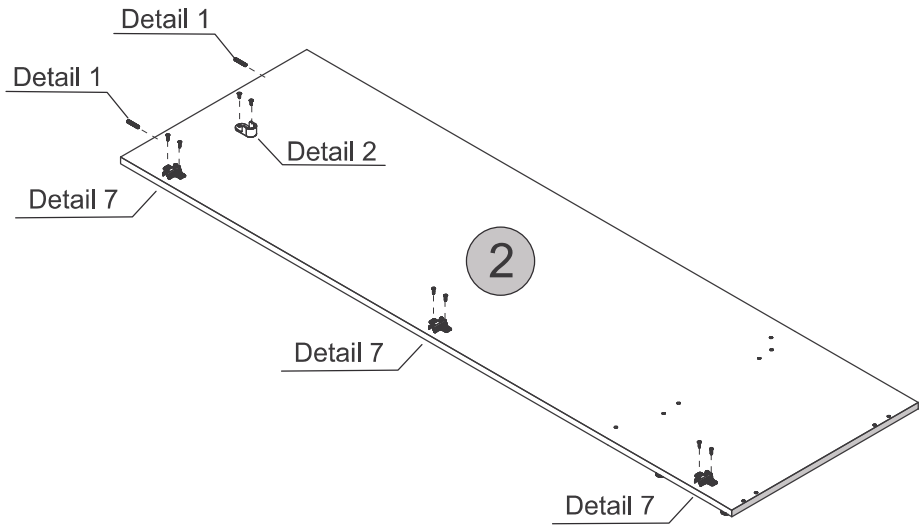

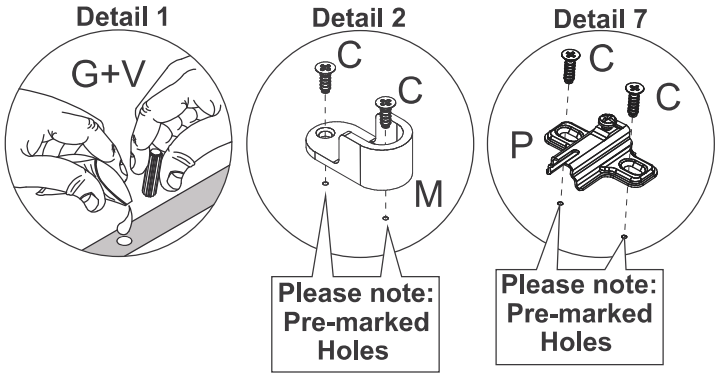

STEP 4

PARTS REQUIRED

2 - DIVISION PANEL	x1

HARDWARE REQUIRED

C	Ø4,0 x 14mm	08
M		01
P		03

TOOLS REQUIRED

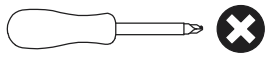

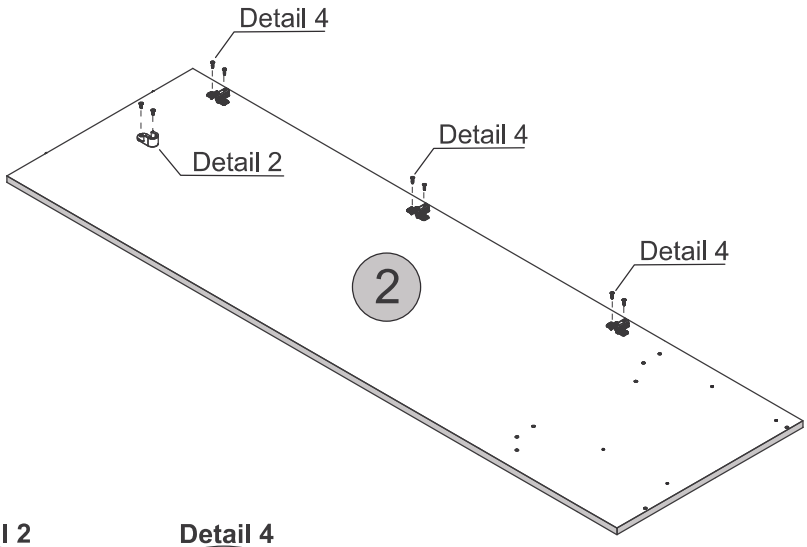

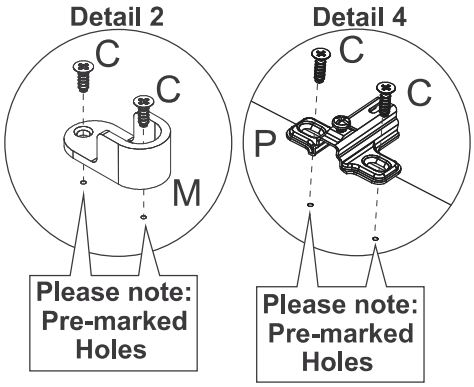

STEP 5

PARTS REQUIRED

2 - DIVISION PANEL	x1

HARDWARE REQUIRED

A	Ø6,0 x 10mm	04
Q	Right	02

TOOLS REQUIRED

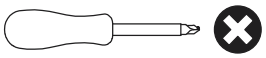

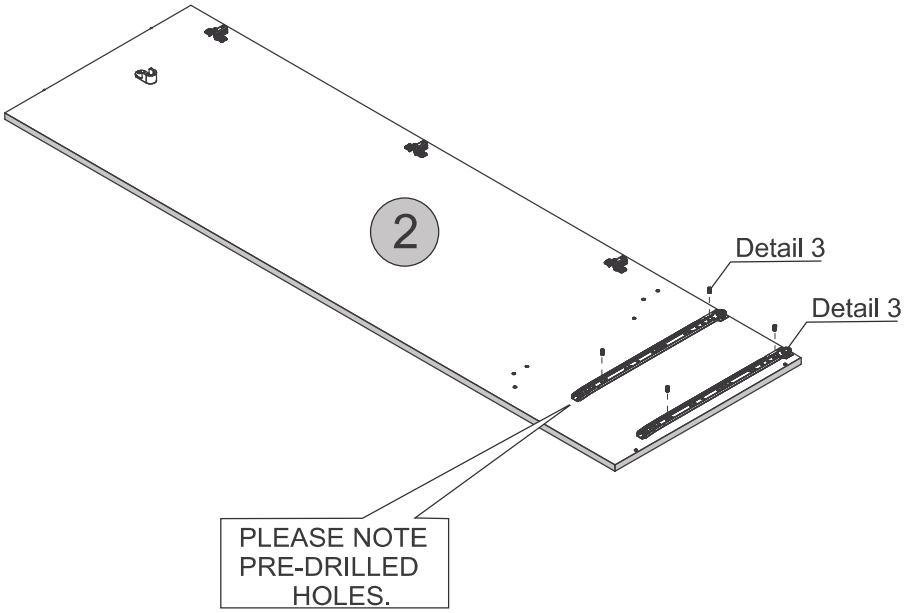

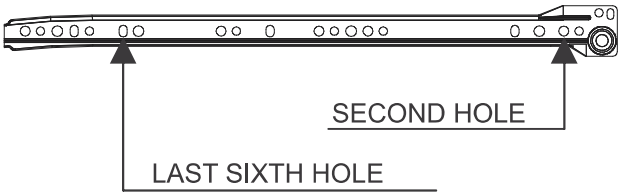

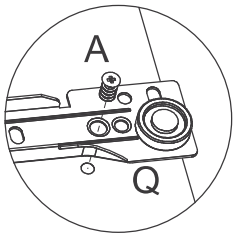

Detail 3

STEP 6

PARTS REQUIRED

6 - RIGHT SIDE PANEL	x1

HARDWARE REQUIRED

C	Ø4,0 x 14mm	08
H		02
L		02
M		01
P		03

TOOLS REQUIRED

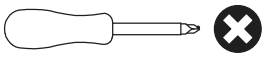

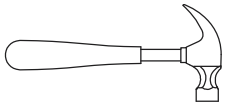

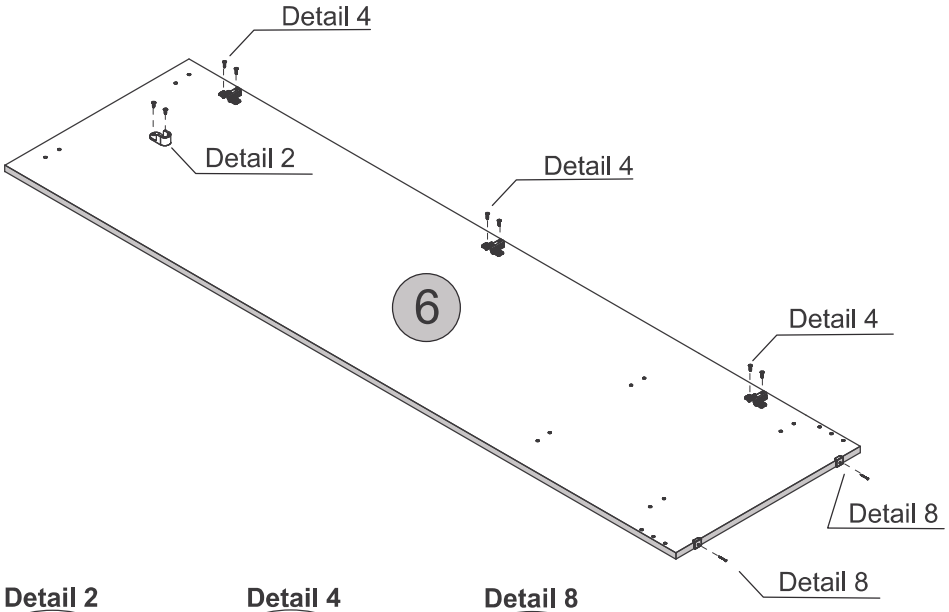

Detail 2

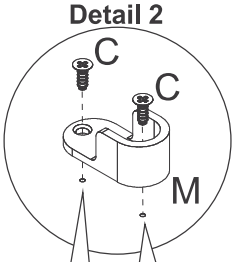

Please note: Pre-marked Holes

Detail 4

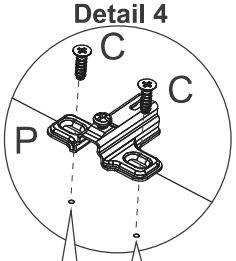

Please note: Pre-marked Holes

Detail 8

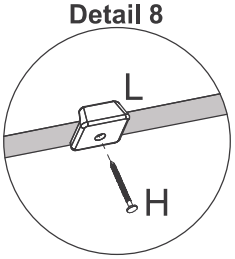

STEP 7

PARTS REQUIRED

7 - FRONT BASEBOARD	x1
8 - BACK BASEBOARD	x1

HARDWARE REQUIRED

H		02
L		02
G	Ø6,0 x 30mm	08
V	Glue	01

TOOLS REQUIRED

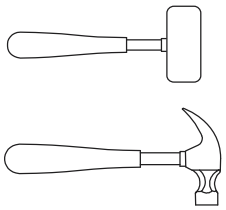

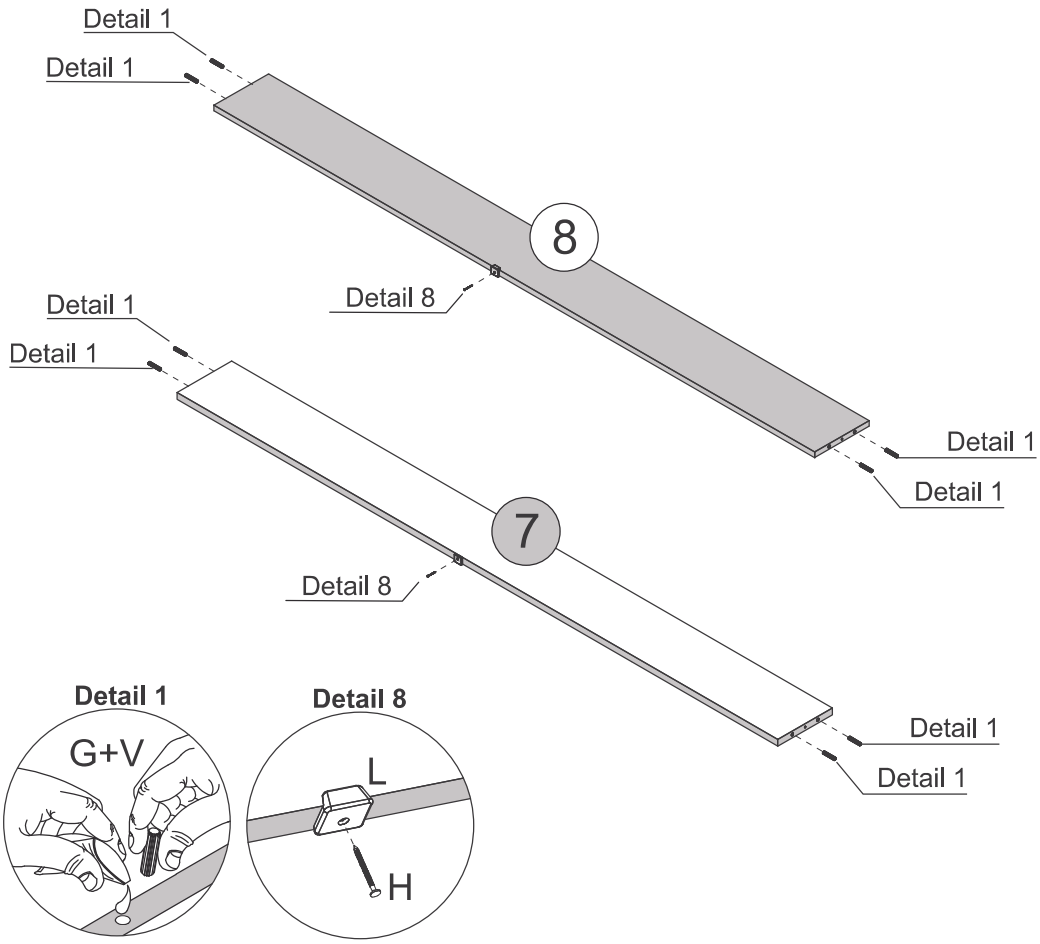

STEP 8

PARTS REQUIRED

1 - BASE PANEL	x2
5 - SHELF	x1

HARDWARE REQUIRED

G	Ø6,0 x 30mm	12
V	Glue	01
Z	Ø4,0 x 12mm	04
A1		02

TOOLS REQUIRED

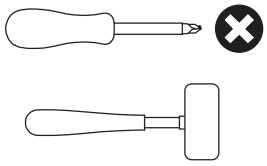

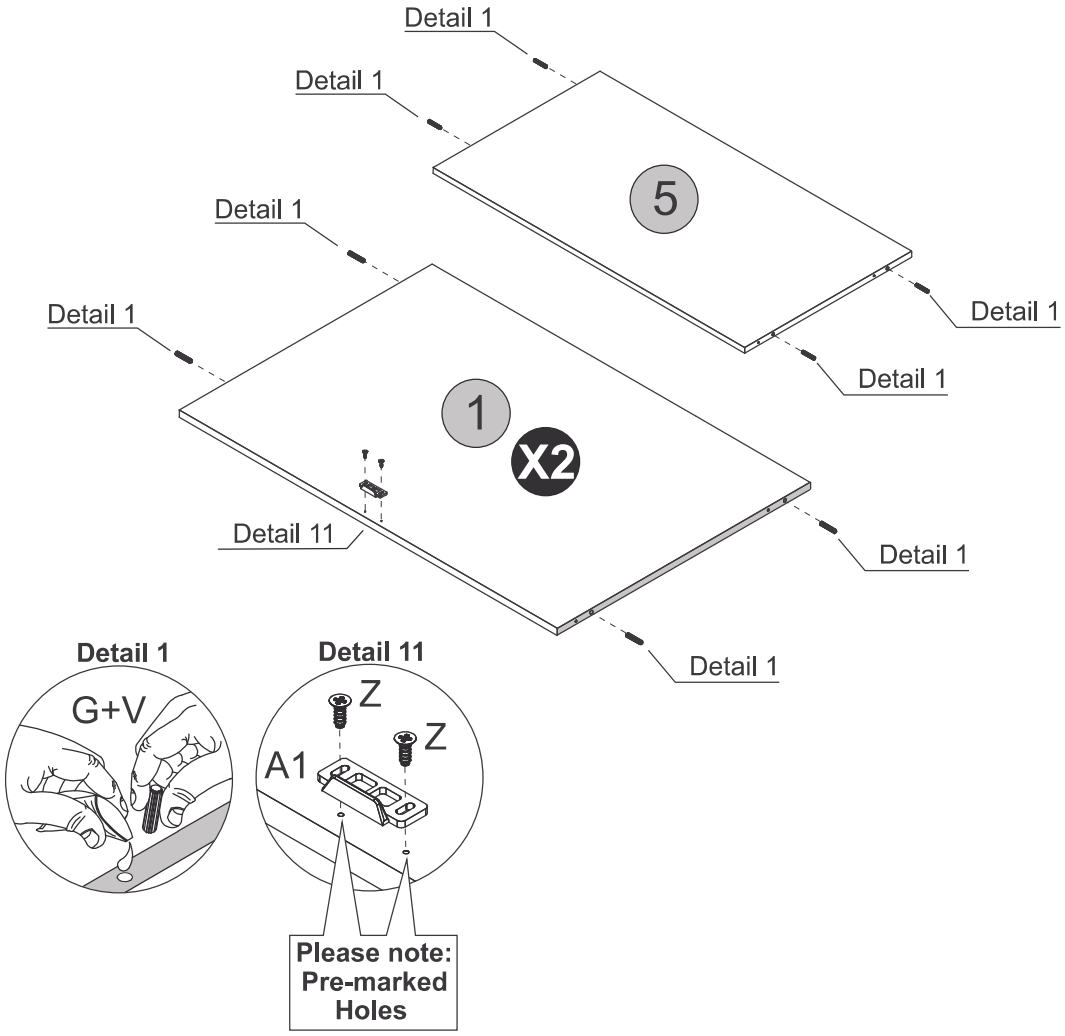

STEP 9

PARTS REQUIRED

3 - TOP PANEL	x1

HARDWARE REQUIRED

G	Ø6,0 x 30mm	04
J		04
V	Glue	01
Z	Ø4,0 x 12mm	08
A1		02

TOOLS REQUIRED

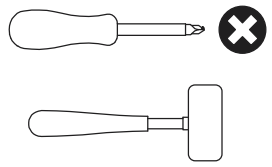

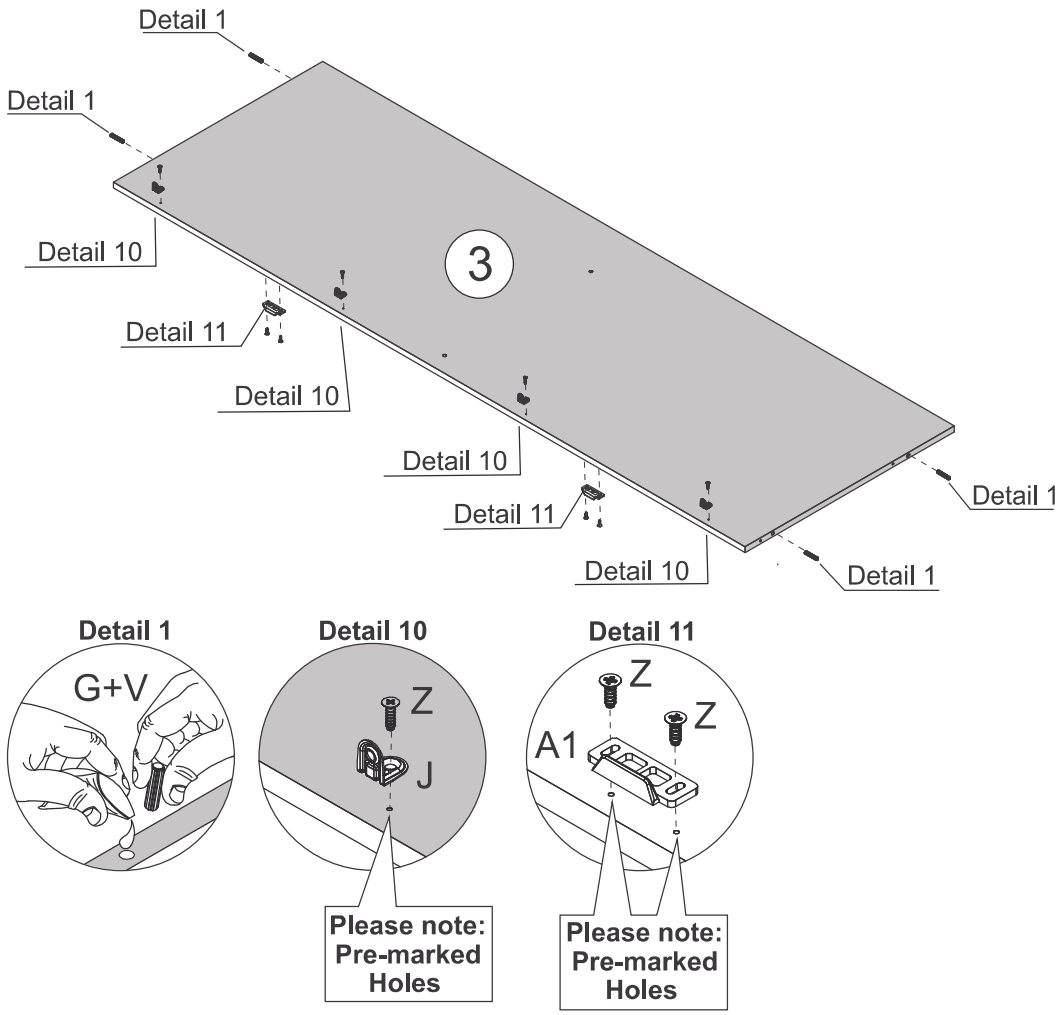

STEP 10

PARTS REQUIRED

1 - BASE PANEL	x2
2 - DIVISION PANEL	x1
3 - TOP PANEL	x1

HARDWARE REQUIRED

F	Ø4,0 x 50mm	06
V	Glue	01

TOOLS REQUIRED

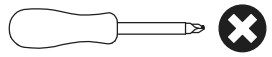

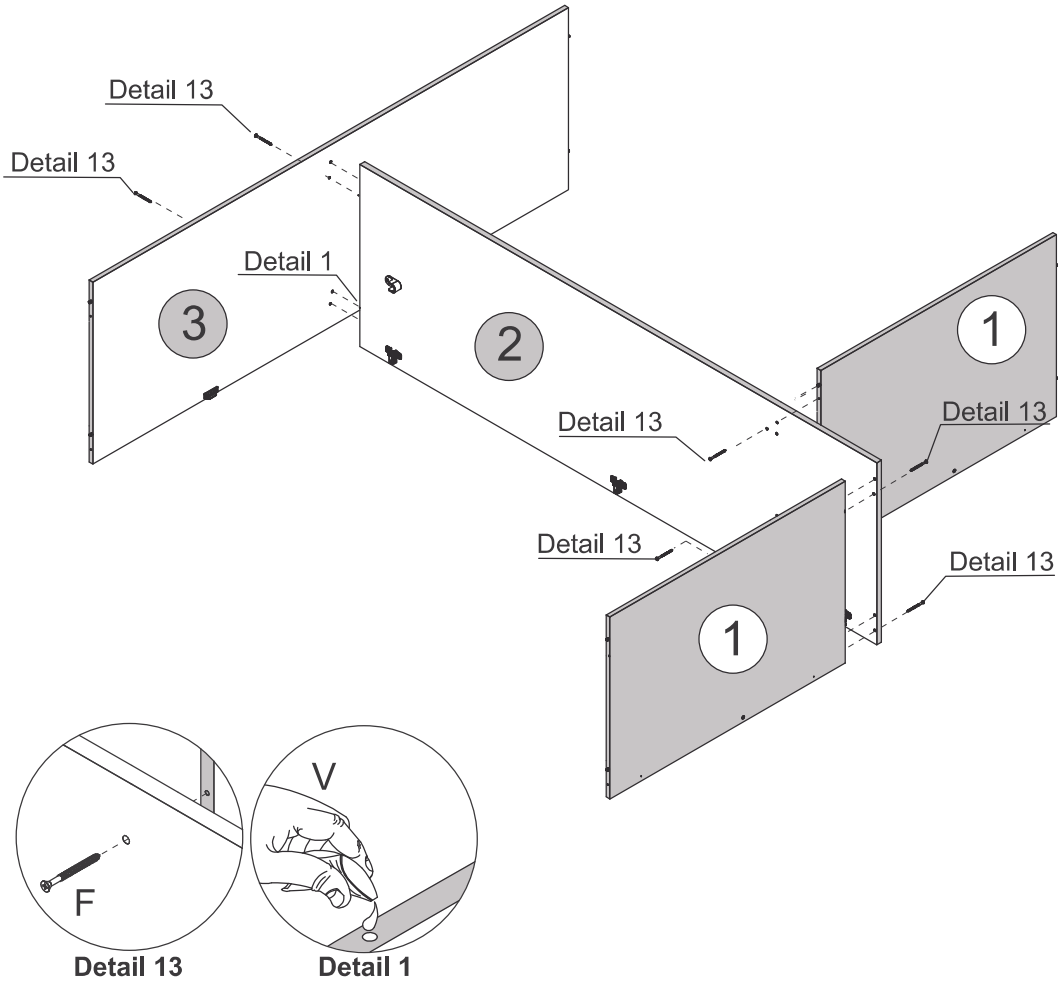

STEP 11

PARTS REQUIRED

4 - LEFT SIDE PANEL	x1

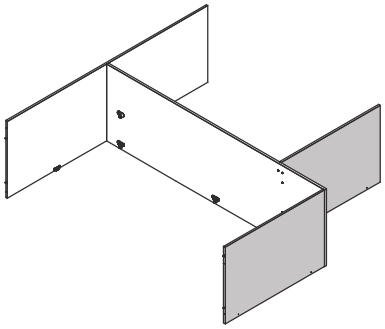

HARDWARE REQUIRED

F	Ø4,0 x 50mm	04
V	Glue	01

TOOLS REQUIRED

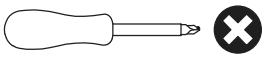

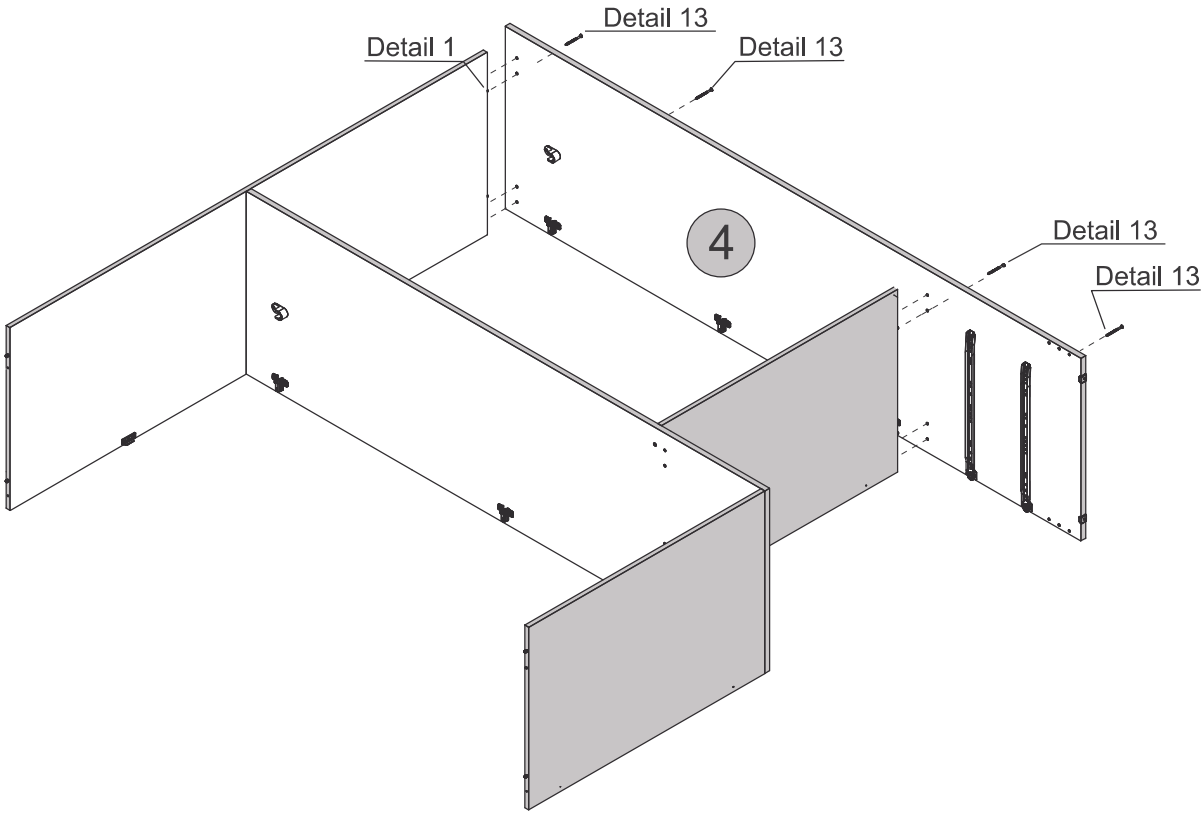

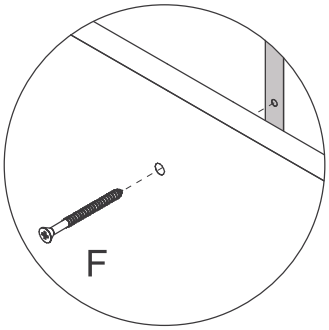

Detail 13

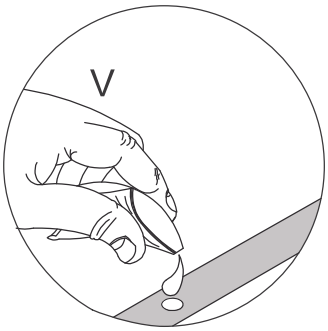

Detail 1

STEP 12

PARTS REQUIRED

5 - SHELF	x1
6 - RIGHT SIDE PANEL	x1
7 - FRONT BASEBOARD	x1
8 - BACK BASEBOARD	x1

HARDWARE REQUIRED

F	Ø4,0 x 50mm	12
V	Glue	01

TOOLS REQUIRED

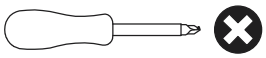

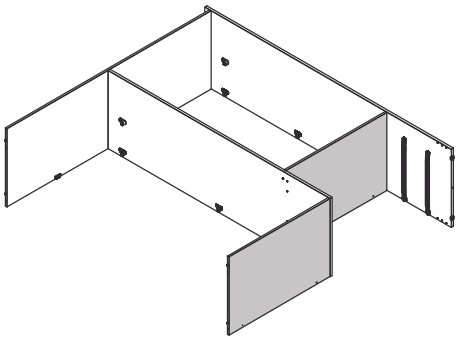

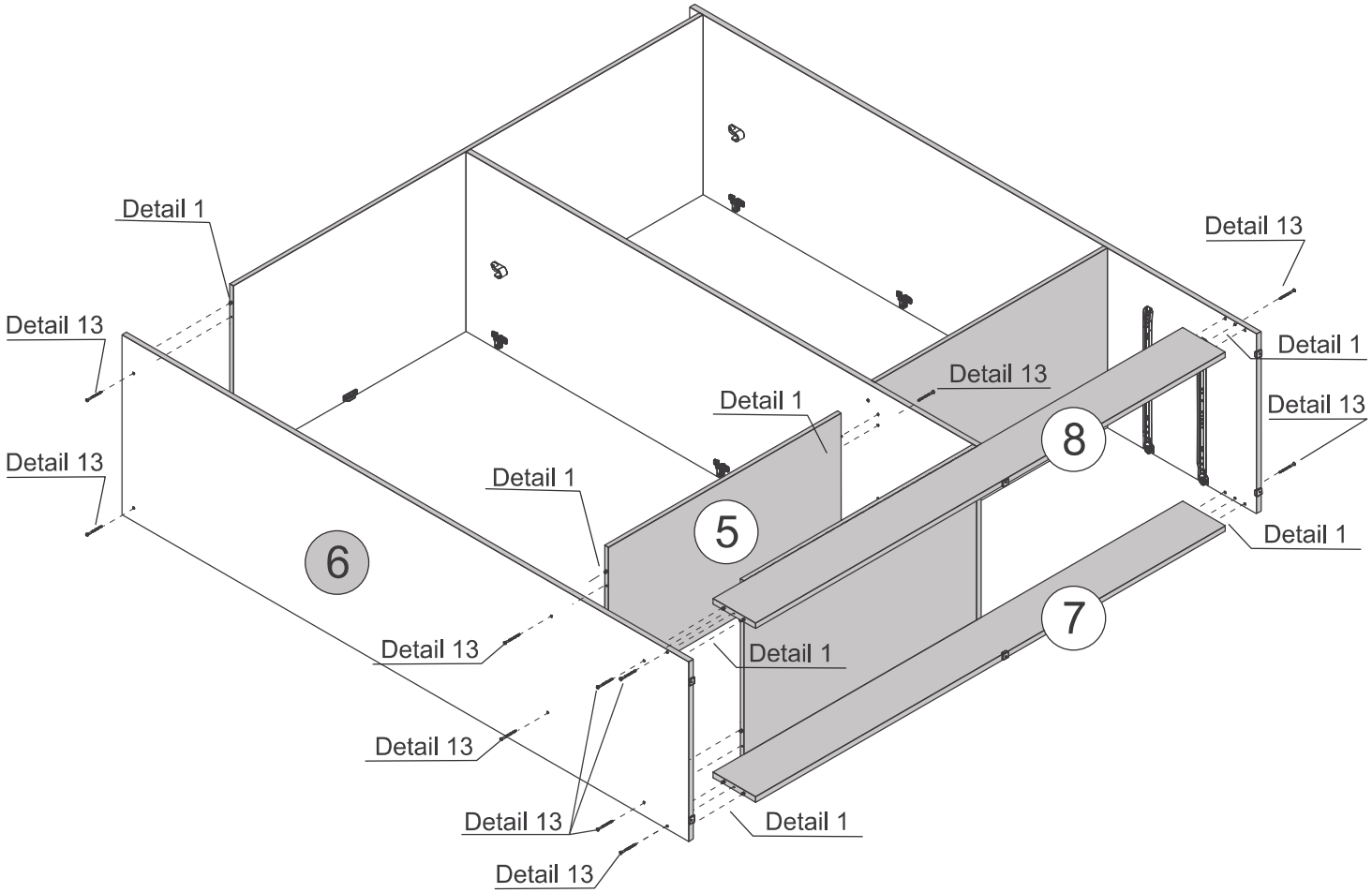

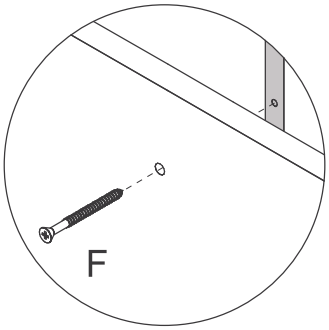

Detail 13

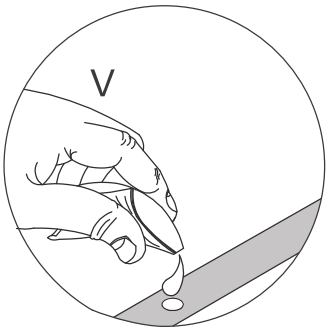

Detail 1

STEP 13

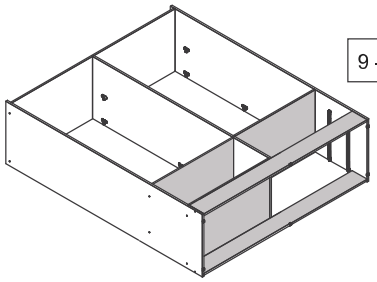

PARTS REQUIRED

9 - BACK PANEL	x4

HARDWARE REQUIRED

B	Ø4,0 x 14mm	12
H	10 x 10	12
R		02

TOOLS REQUIRED

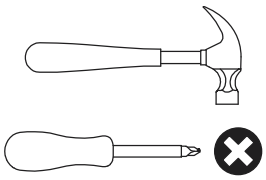

IMPORTANT PLEASE FOLLOW !

Please make sure Part 9 is lined up correctly at the top before placing fitting H into the panel as this can affect the alignment of the doors once assembled.

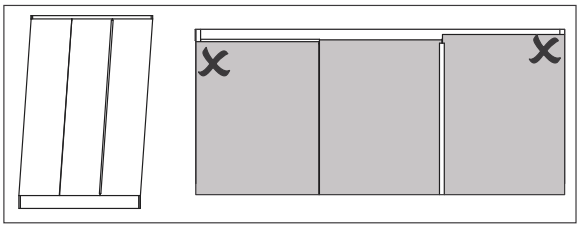

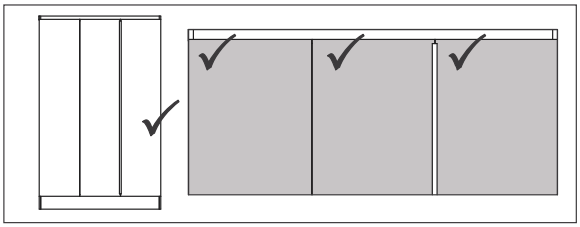

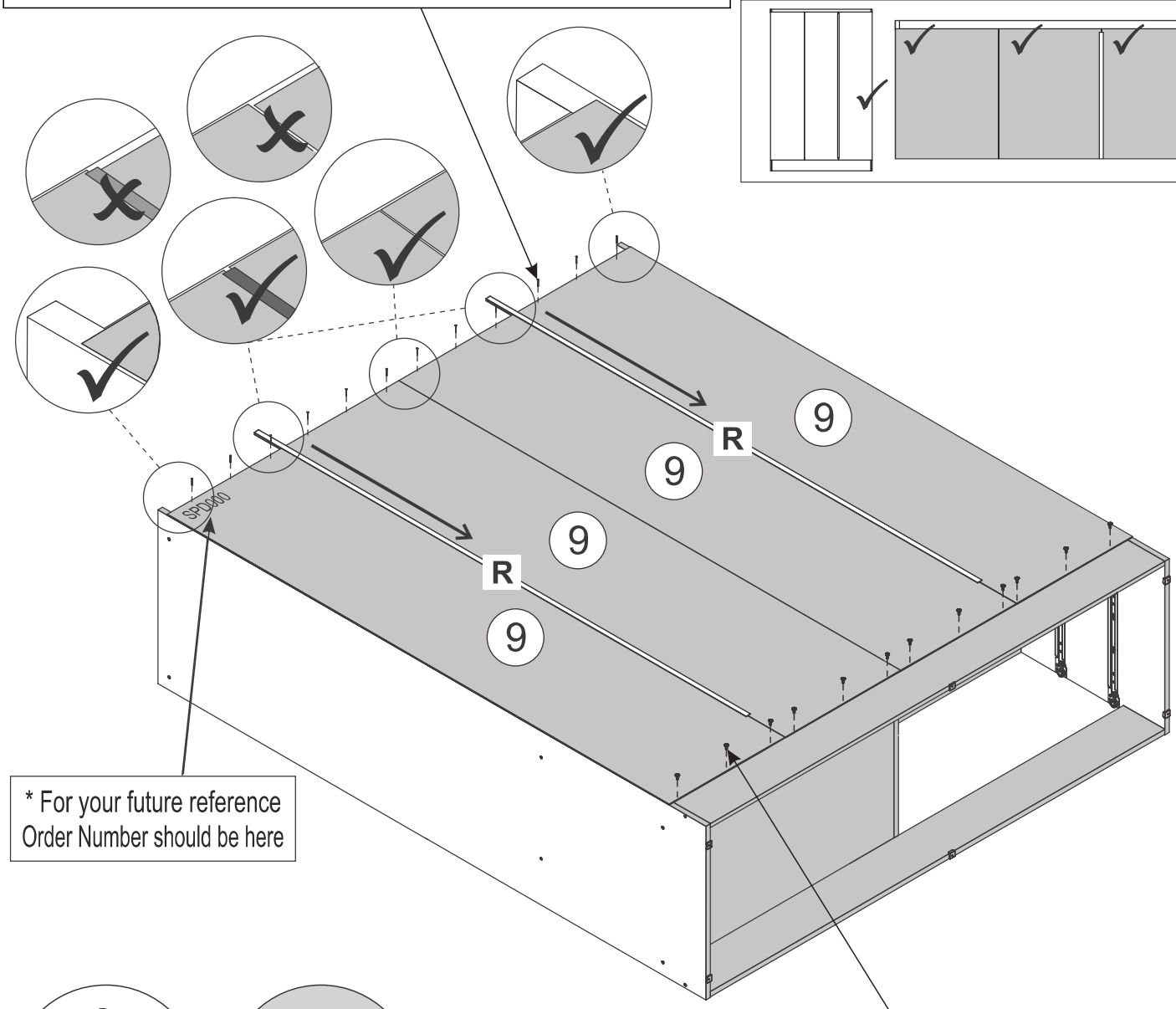

* For your future reference Order Number should be here

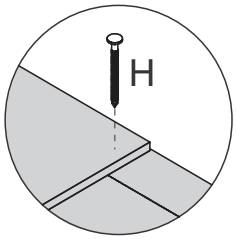

Detail 15

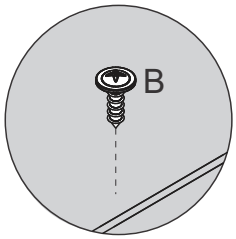

Detail 16

IMPORTANT PLEASE FOLLOW !

Please make sure Part 9 isn't overhanging at the sides before you screw fitting B into the plinth.

STEP 14

PARTS REQUIRED

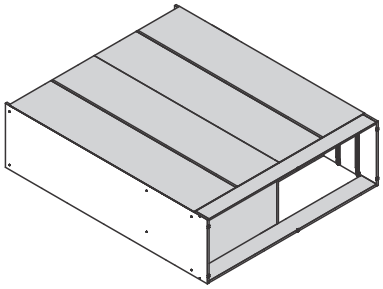

HARDWARE REQUIRED

H	10 x 10	50
I		16

TOOLS REQUIRED

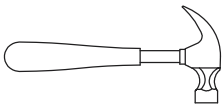

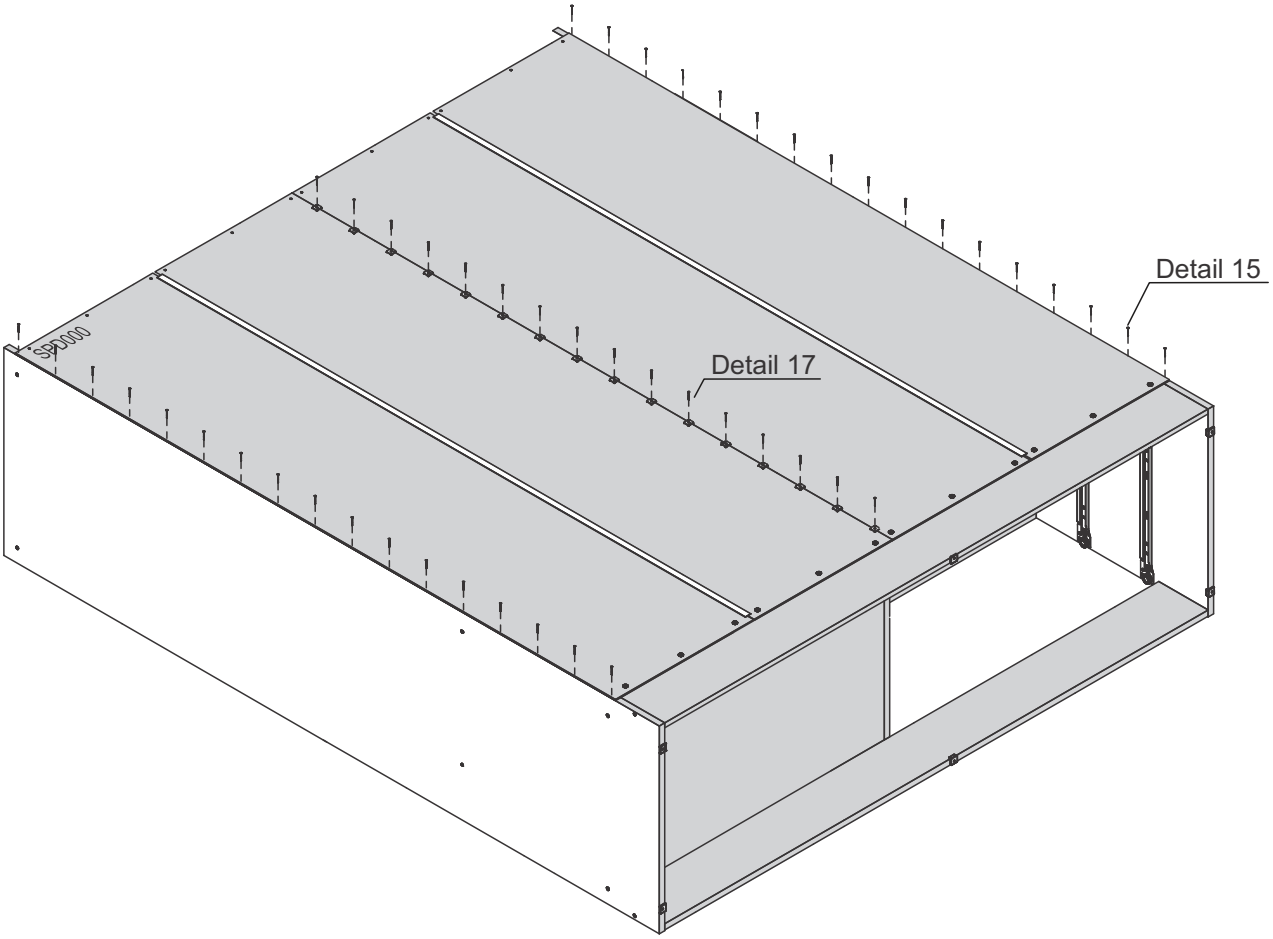

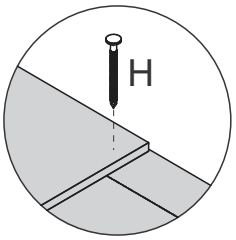

Detail 15

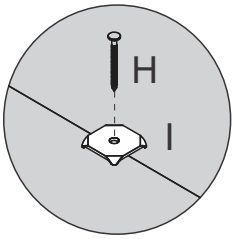

Detail 17

STEP 15

PARTS REQUIRED

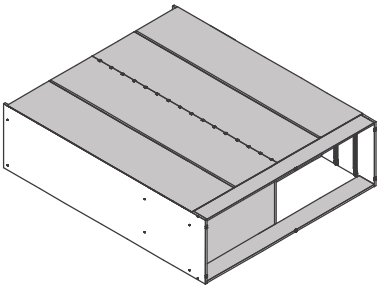

HARDWARE REQUIRED

H	10 x 10	04

TOOLS REQUIRED

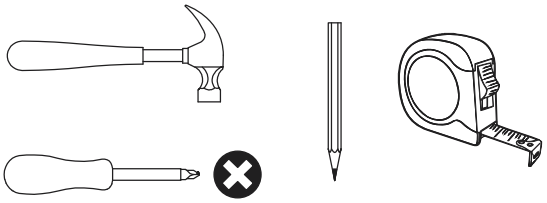

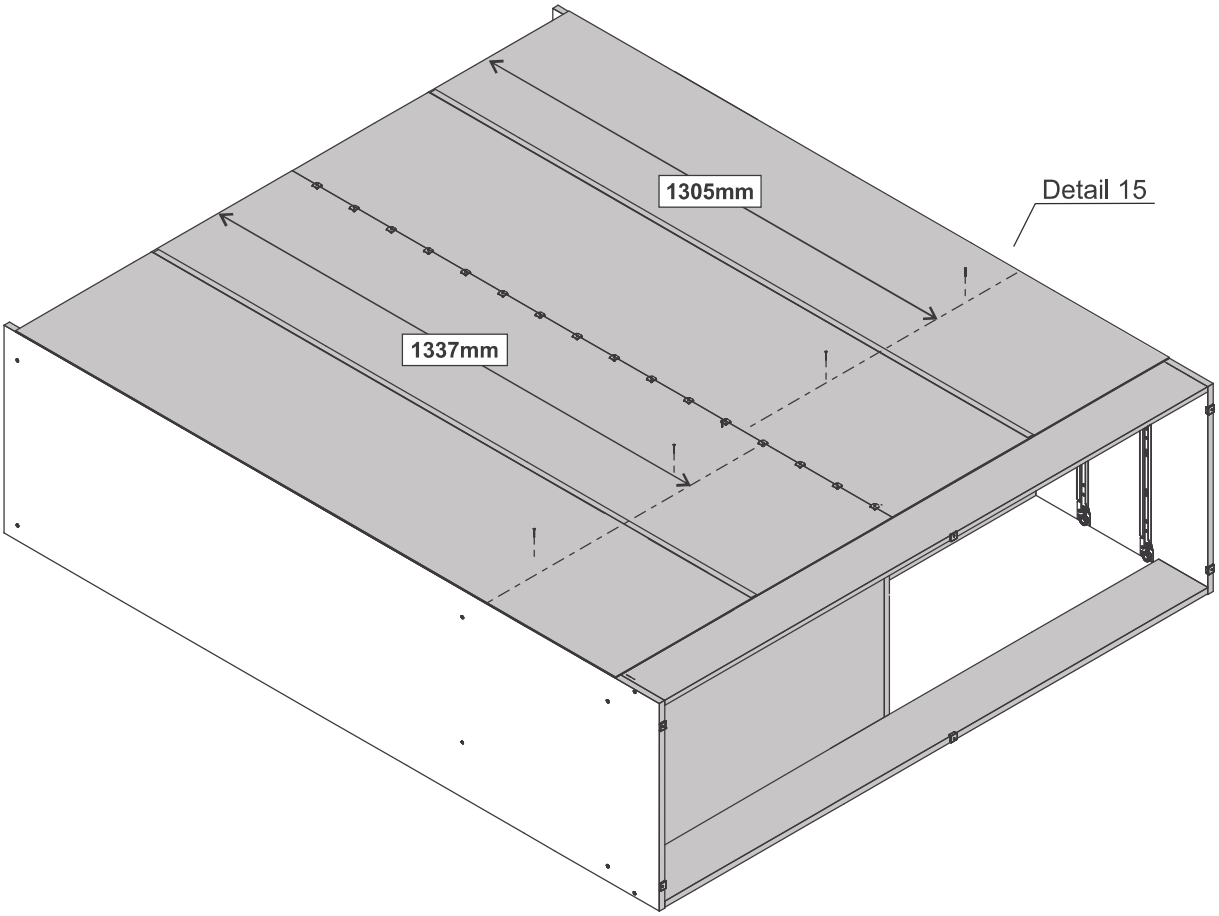

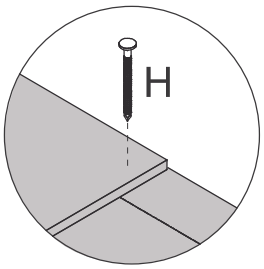

Detail 15

STEP 16

PARTS REQUIRED

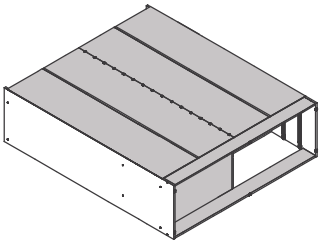

HARDWARE REQUIRED

J		04
Z	Ø4,0 x 12mm	08

TOOLS REQUIRED

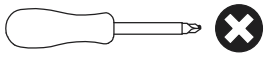

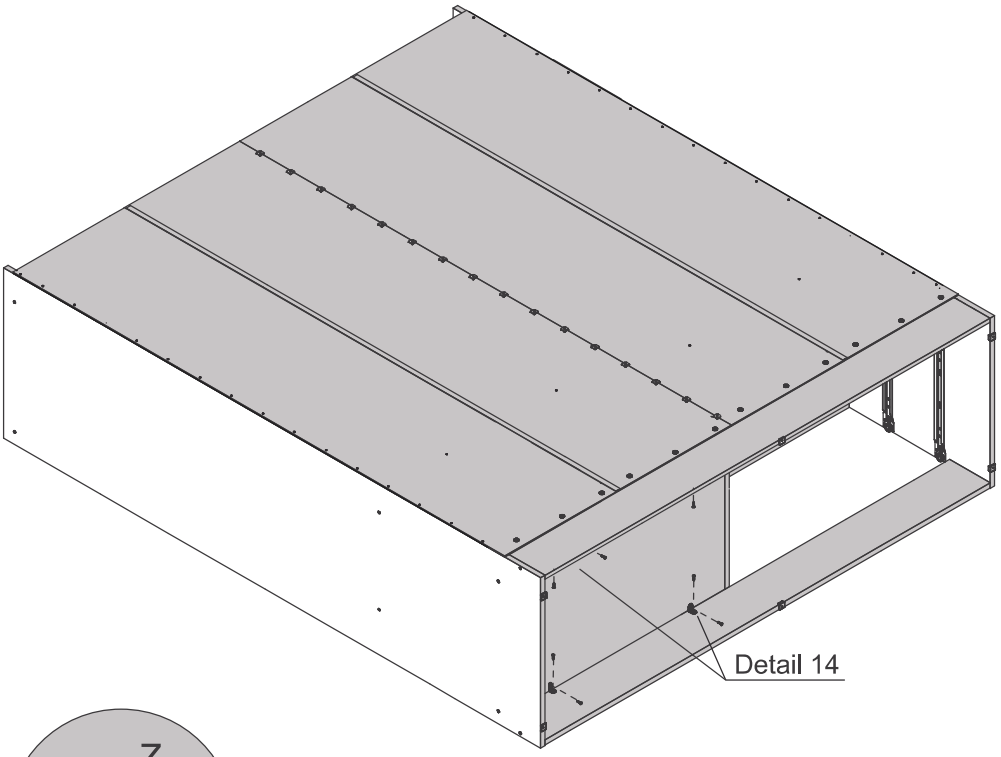

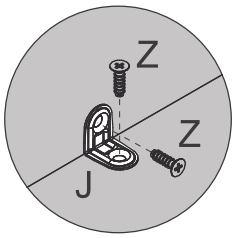

Detail 14

STEP 17

PARTS REQUIRED

10 - FRAME	x1

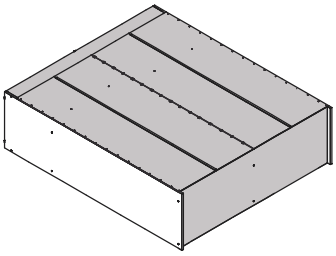

HARDWARE REQUIRED

J		02
Z	Ø4,0 x 12mm	08

TOOLS REQUIRED

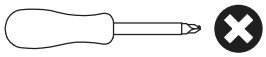

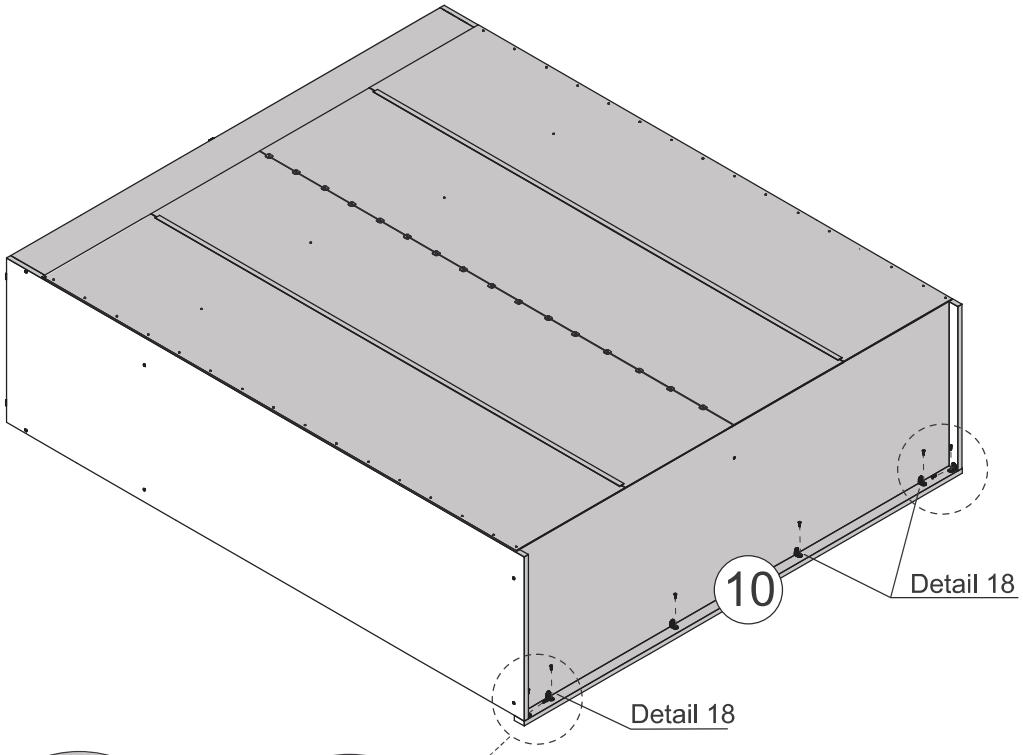

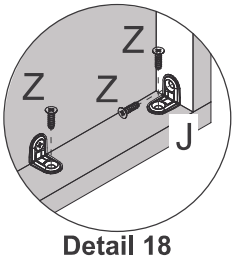

Detail 18

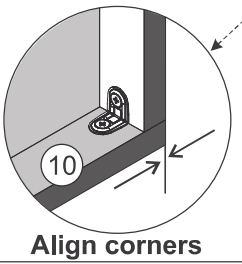

Align corners

STEP 18

PARTS REQUIRED

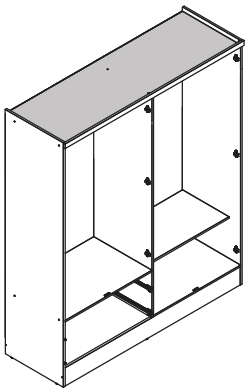

HARDWARE REQUIRED

Y		02

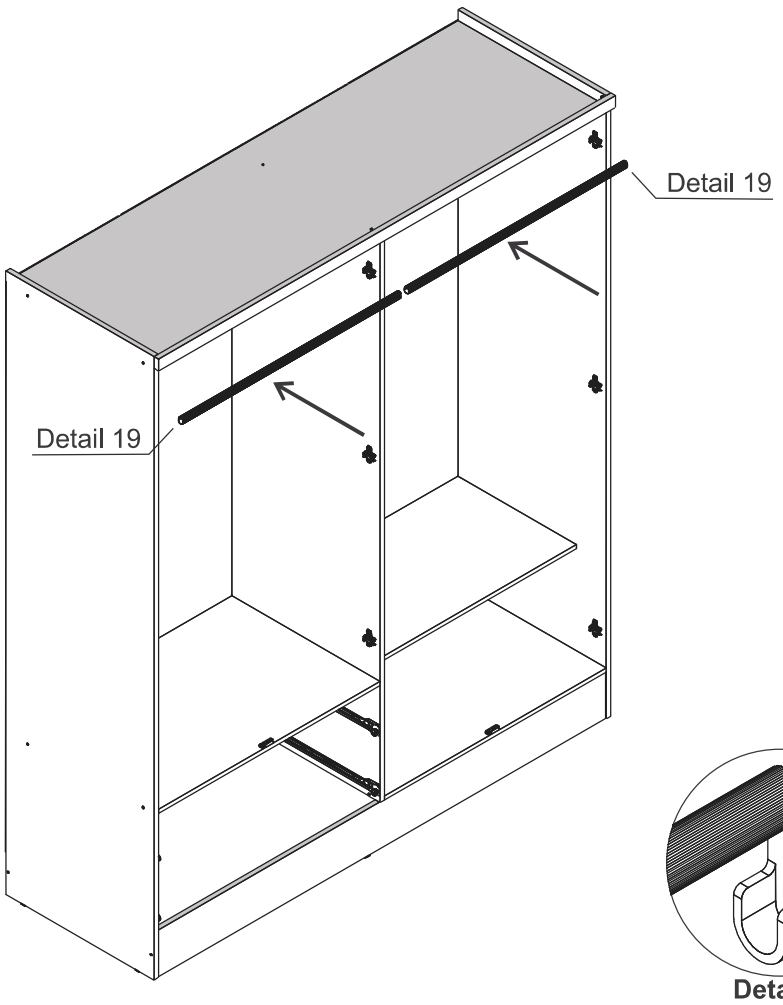

STEP 19

PARTS REQUIRED

15 - DRAWER SIDE	x4
16 - DRAWER BACK PANEL	x2
19 - DRAWER BOTTOM SUPPORT BAR	x2

HARDWARE REQUIRED

G	Ø6,0 x 30mm	20
V	Glue	01

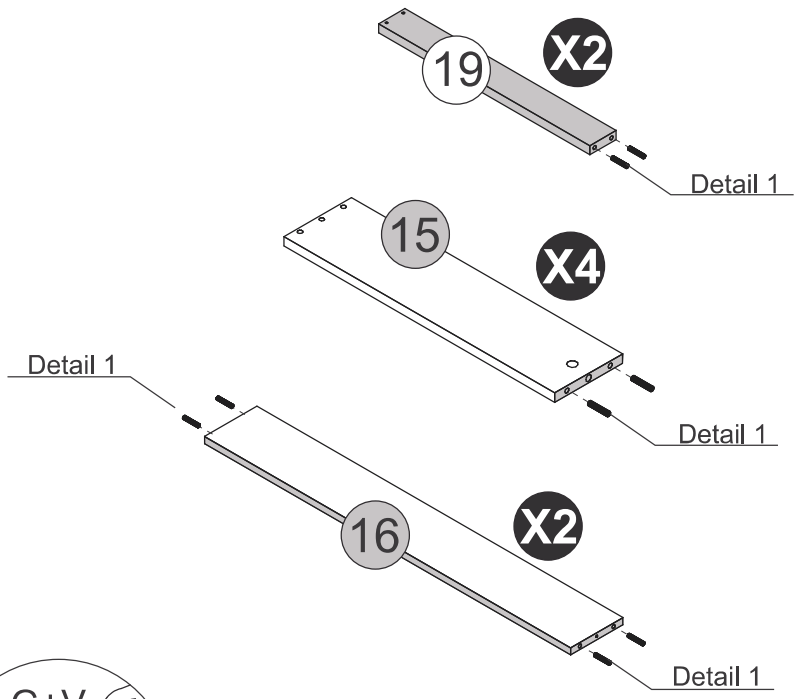

STEP 20

PARTS REQUIRED

17 - DRAWER FRONT	x2

HARDWARE REQUIRED

X		04

TOOLS REQUIRED

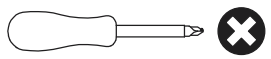

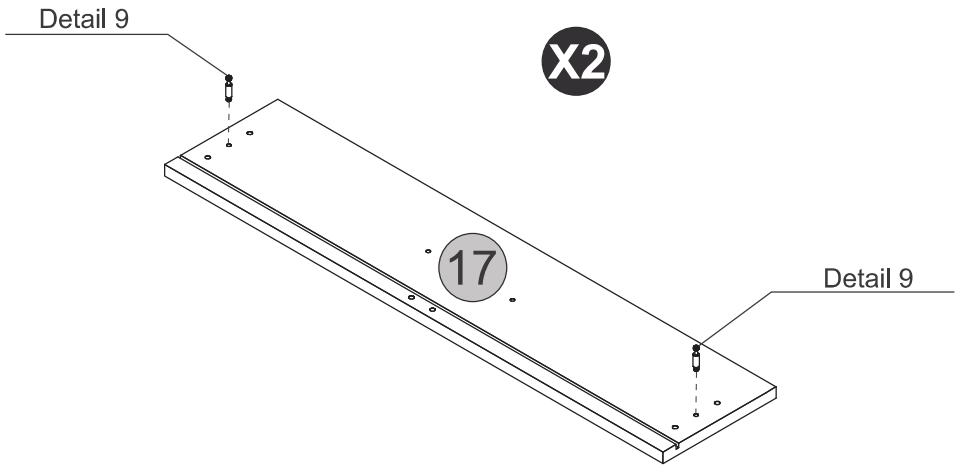

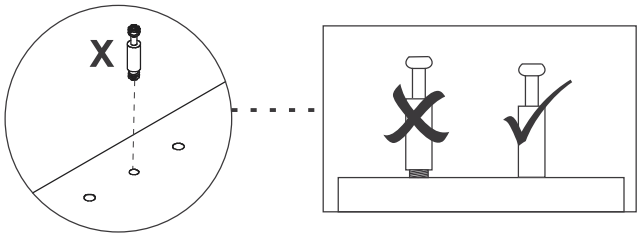

Detail 9

STEP 21

PARTS REQUIRED

15 - DRAWER SIDE	x4
16 - DRAWER BACK PANEL	x2

HARDWARE REQUIRED

F	Ø4,0 x 50mm	04

TOOLS REQUIRED

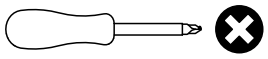

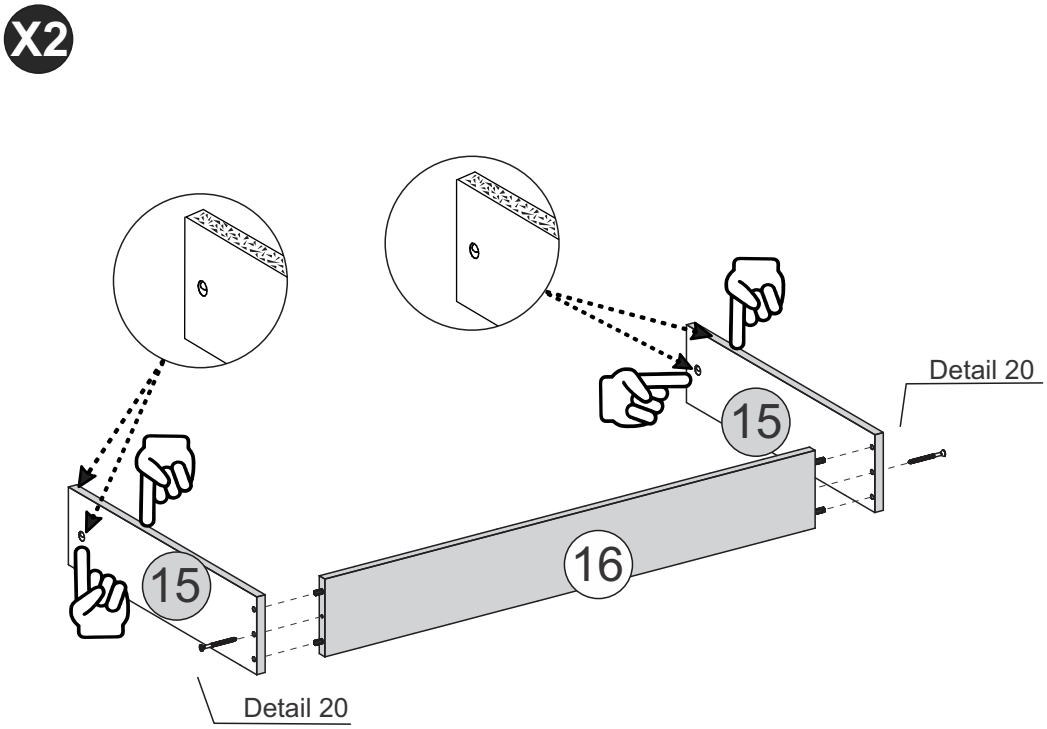

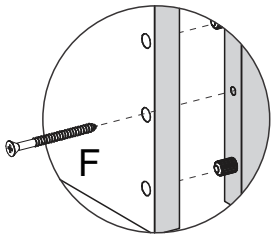

Detail 20

STEP 22

PARTS REQUIRED

17 - DRAWER FRONT	x2

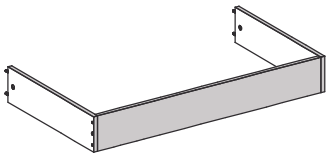

HARDWARE REQUIRED

B1		04
V	Glue	01
W		04

TOOLS REQUIRED

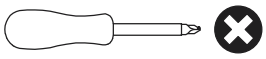

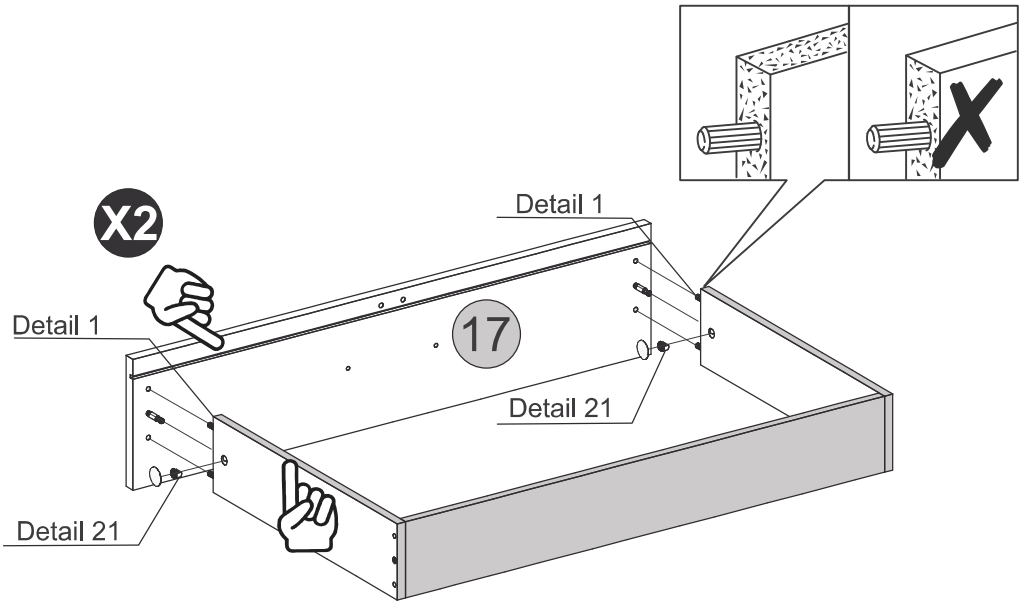

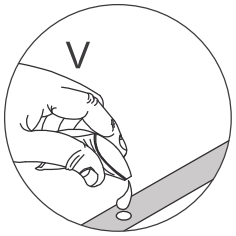

Detail 1

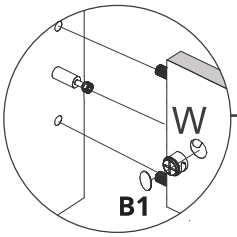

Detail 21

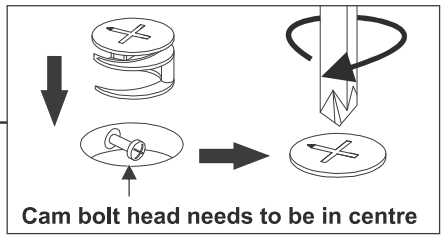

STEP 23

PARTS REQUIRED

18 - DRAWER BOTTOM	x2

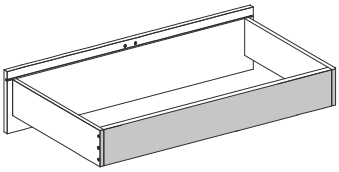

HARDWARE REQUIRED

H	10 x 10	08

TOOLS REQUIRED

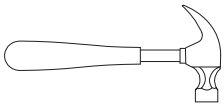

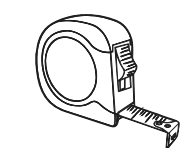

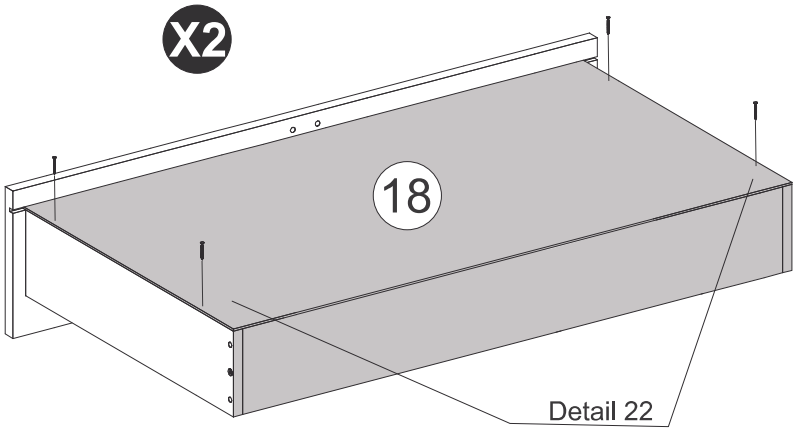

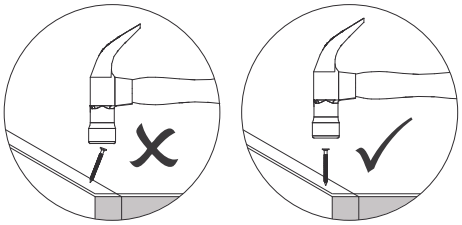

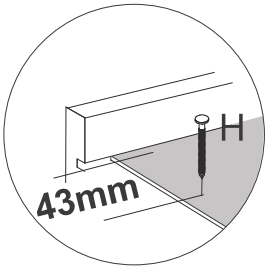

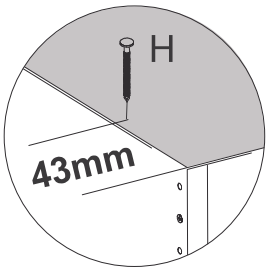

Detail 22

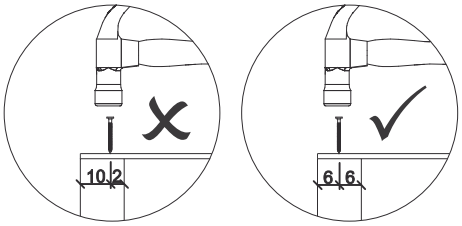

STEP 24

PARTS REQUIRED

19 - DRAWER BOTTOM SUPPORT BAR x2

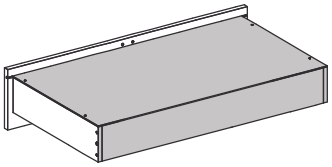

HARDWARE REQUIRED

H	10 x 10	12
V	Glue	01

TOOLS REQUIRED

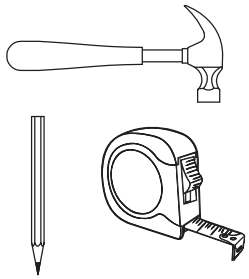

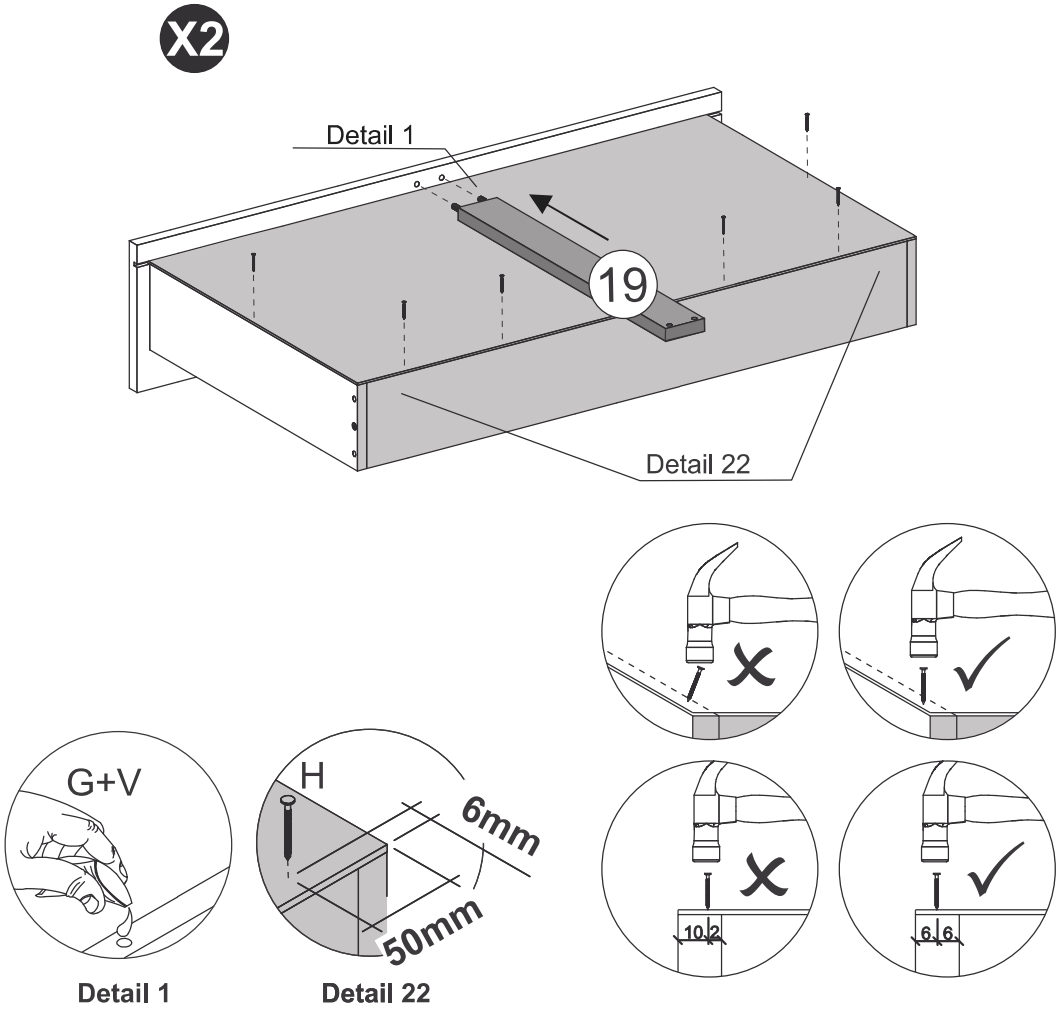

STEP 25

PARTS REQUIRED

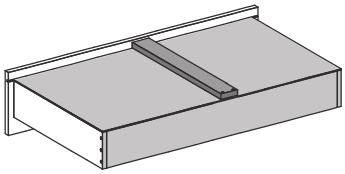

HARDWARE REQUIRED

C	Ø4,0 x 14mm	08
E	Ø3,5 x 40mm	04
Q	LEFT	02
Q	RIGHT	02

TOOLS REQUIRED

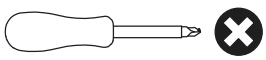

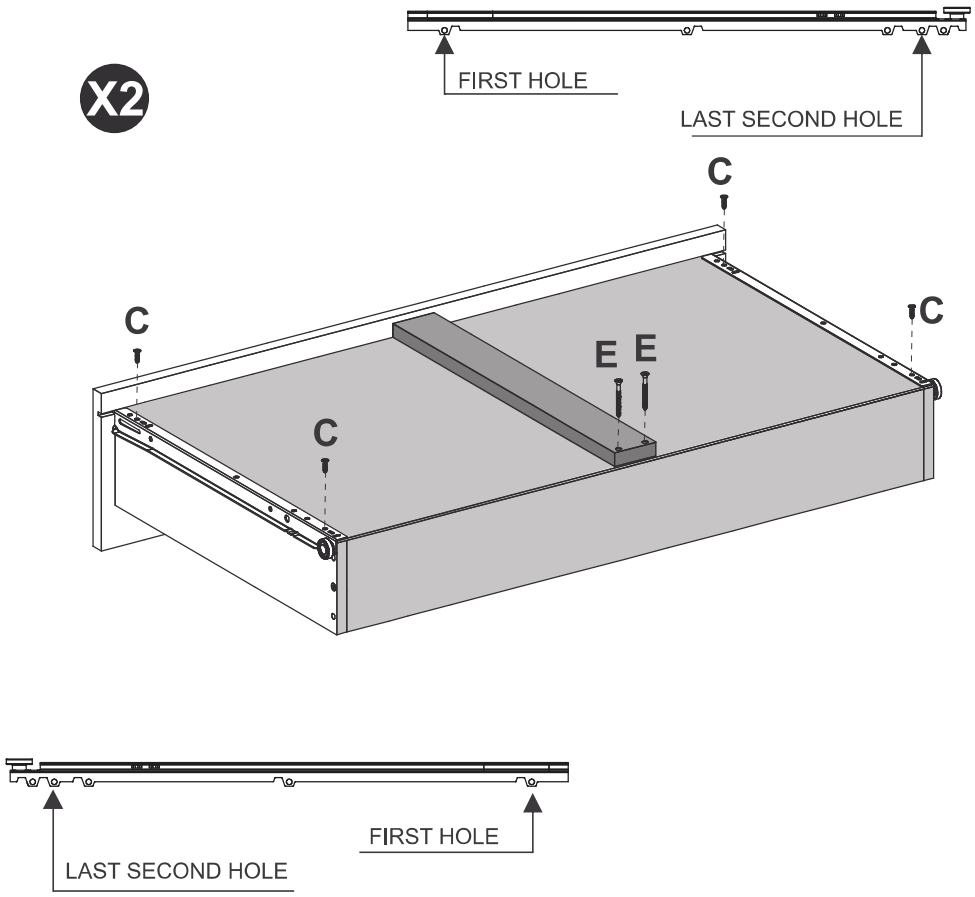

STEP 26

PARTS REQUIRED

11 - RIGHT LARGE DOOR	x1
12 - LEFT LARGE DOOR	x1
13 - RIGHT SMALL DOOR	x1
14 - LEFT SMALL DOOR	x1

HARDWARE REQUIRED

C	Ø4,0 x 14mm	24
O		12

TOOLS REQUIRED

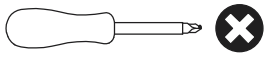

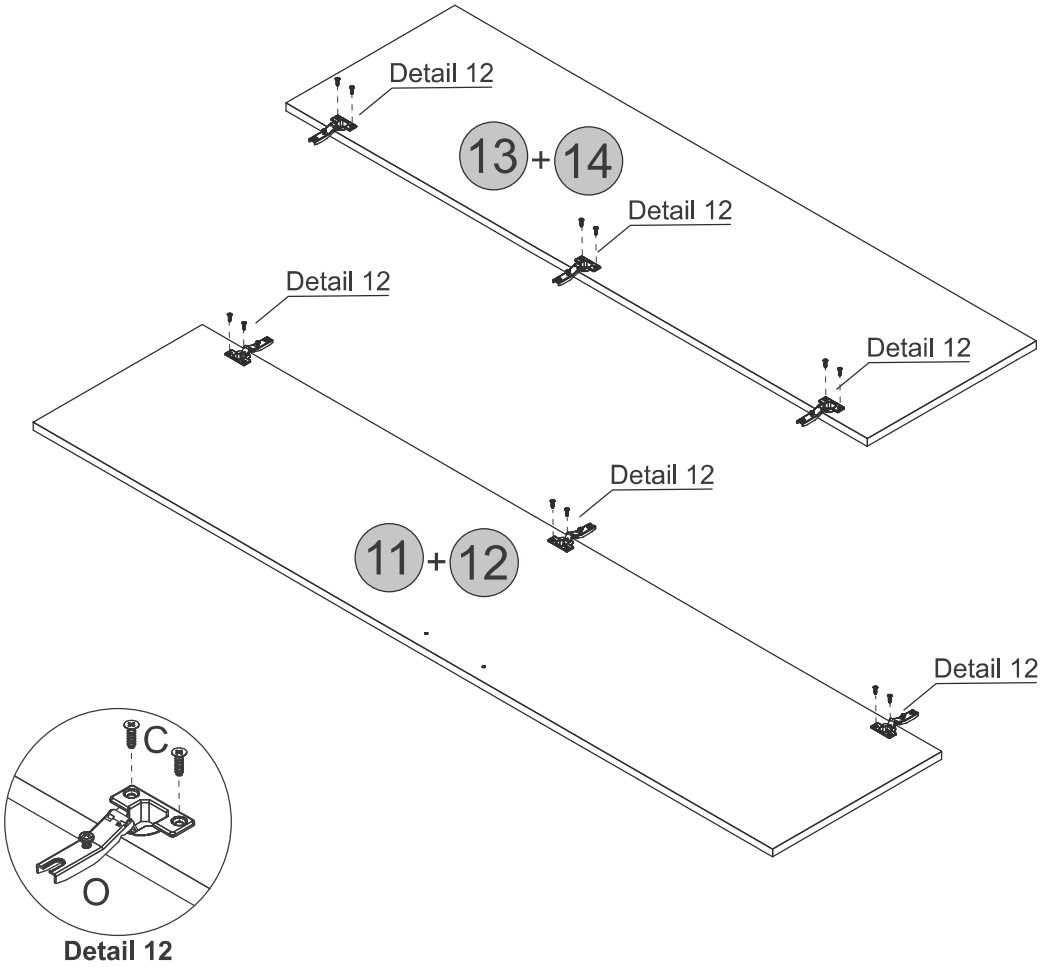

STEP 27

PARTS REQUIRED

11 - RIGHT LARGE DOOR	x1
12 - LEFT LARGE DOOR	x1
13 - RIGHT SMALL DOOR	x1
14 - LEFT SMALL DOOR	x1

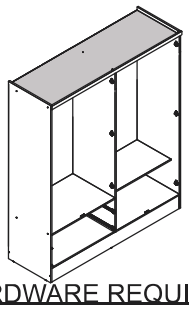

HARDWARE REQUIRED

U		26

TOOLS REQUIRED

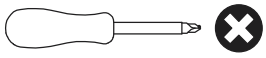

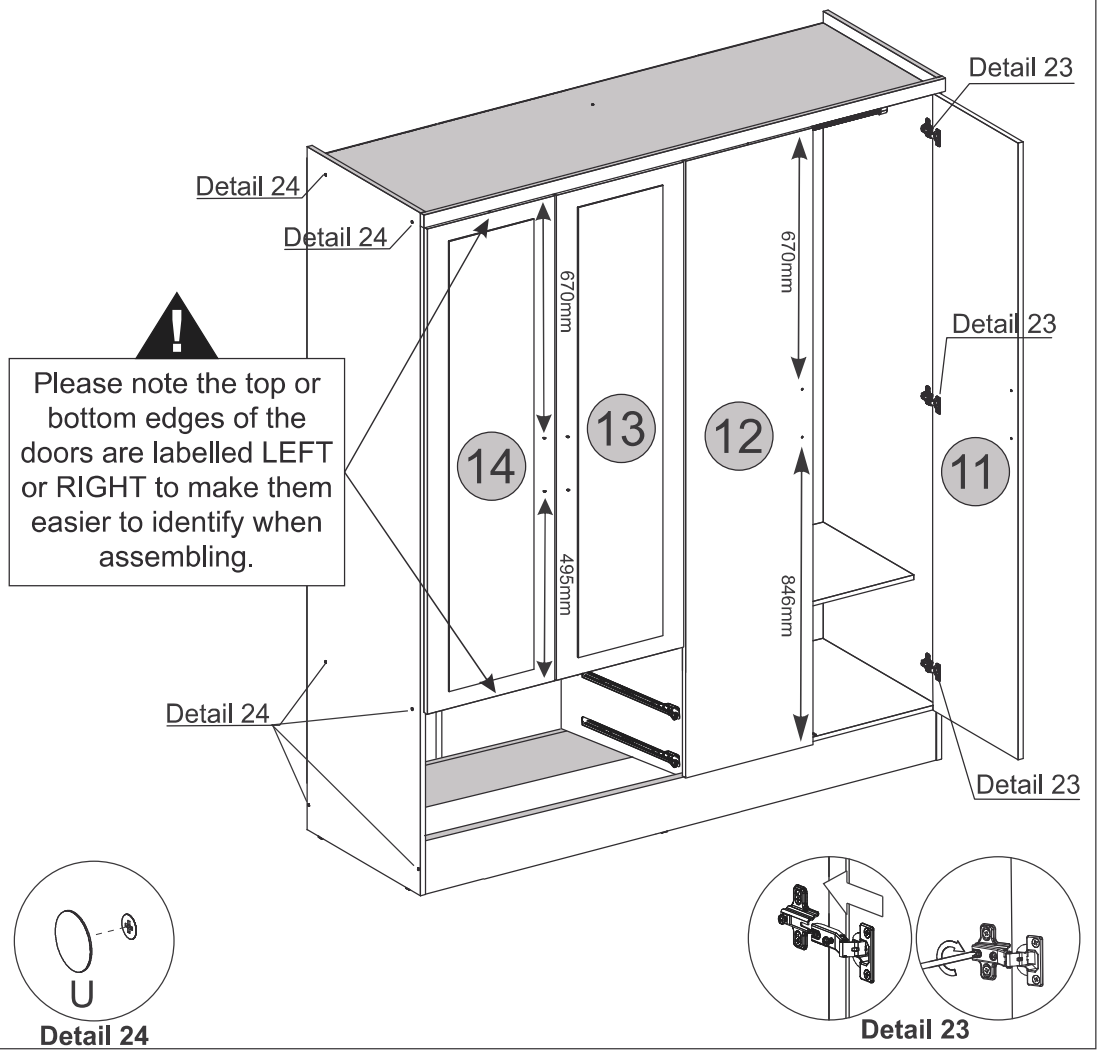

STEP 28

PARTS REQUIRED

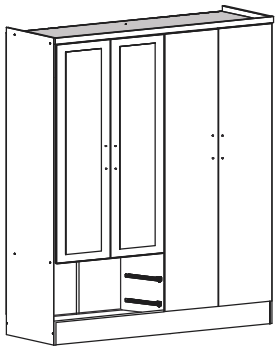

HARDWARE REQUIRED

D	Ø4,0 x 20mm	12
T		06

TOOLS REQUIRED

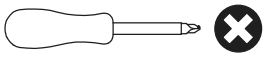

TIP

If desired, after assembly use an alcohol cleaner to erase the number printed on the parts.

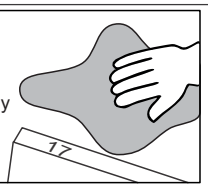

See the last page

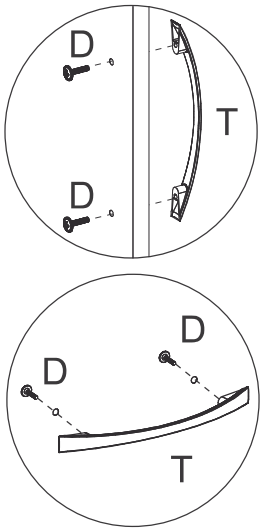

Detail 25

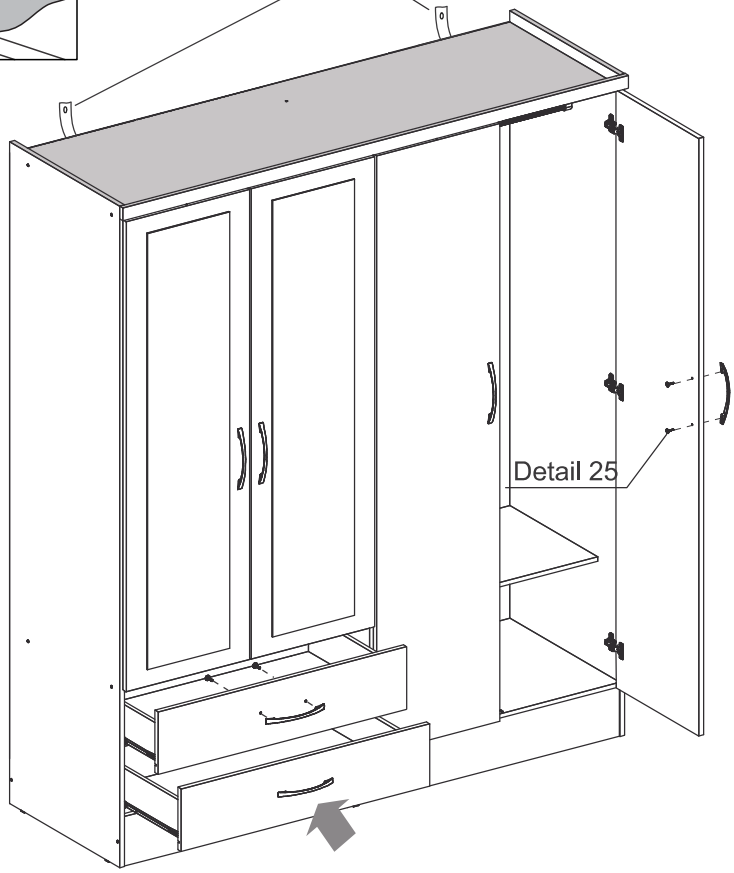

STEP 29

PARTS REQUIRED

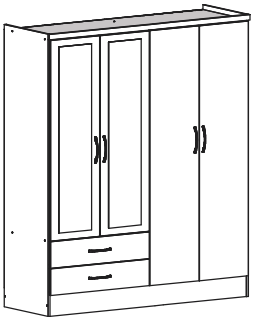

HARDWARE REQUIRED

C	Ø4,0 x 14mm	04

TOOLS REQUIRED

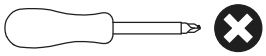

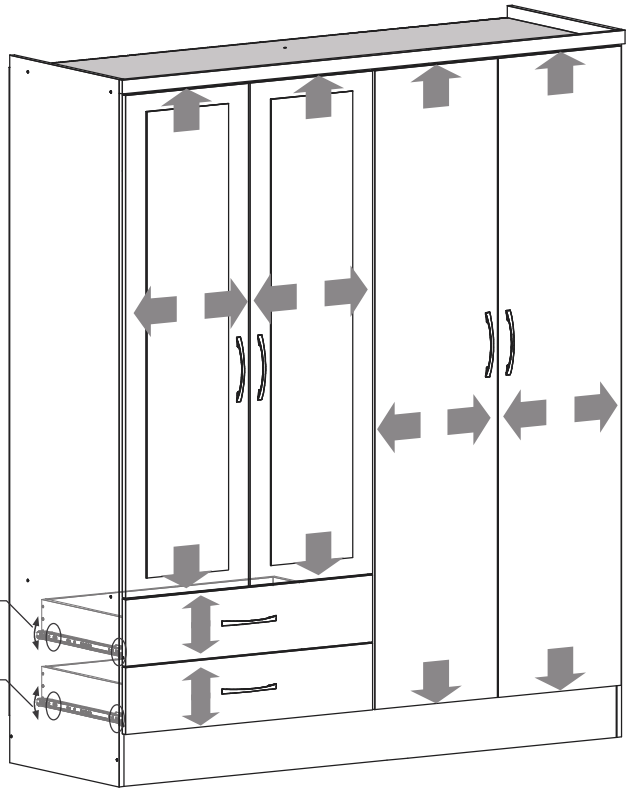

Height Adjustment

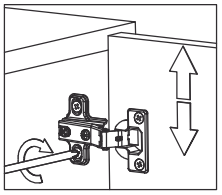

Internal Adjustment

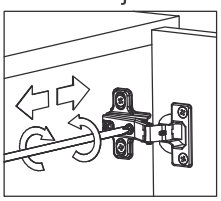

Depth Adjustment

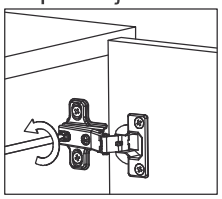

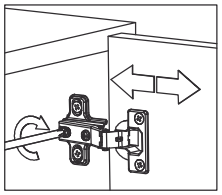

Drawer Adjustment

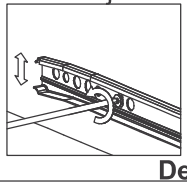

Drawer Lock

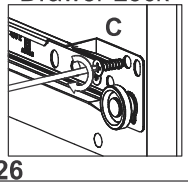

Detail 26

WARNING

Serious or fatal injuries can occur from furniture tipping over. To prevent the furniture from tipping over we recommend that it is permanently fixed to the wall.

Wall fixings are not supplied with this product as different wall materials require different types of fixing devices.
Please make sure you use fixings suitable for the walls in your home.

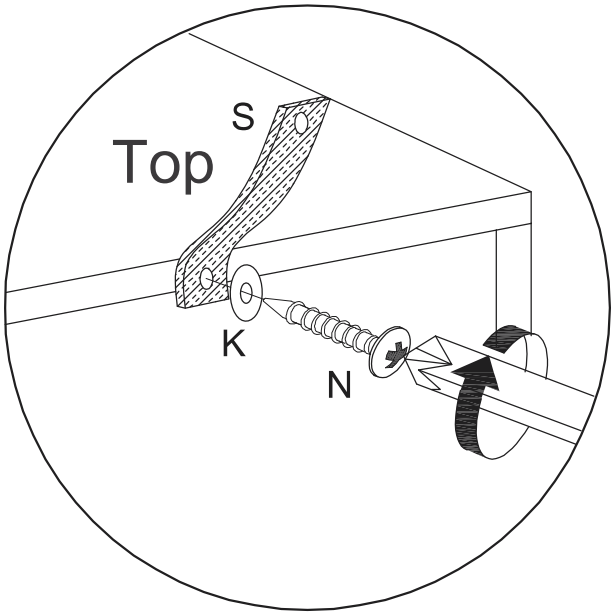

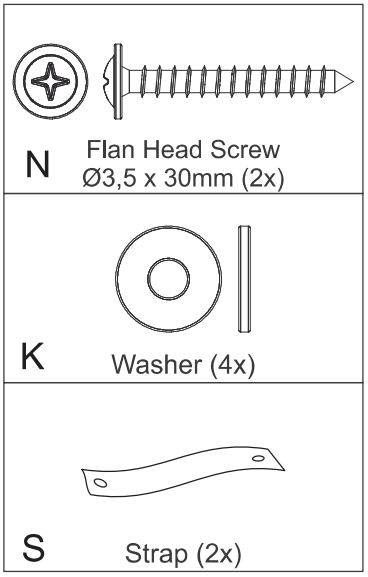

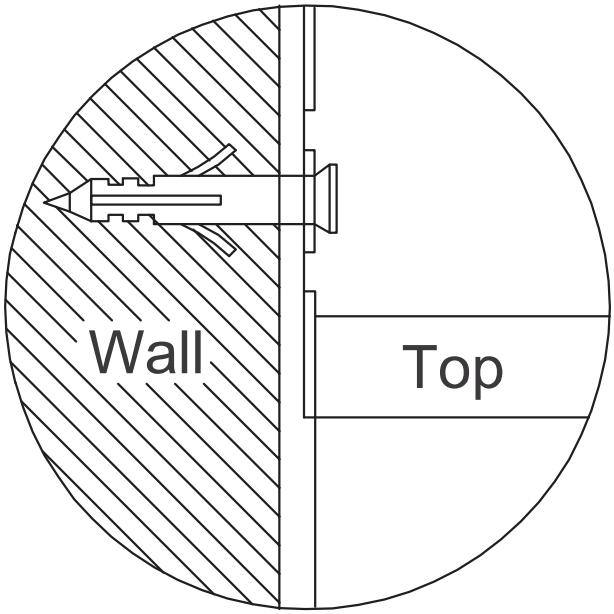

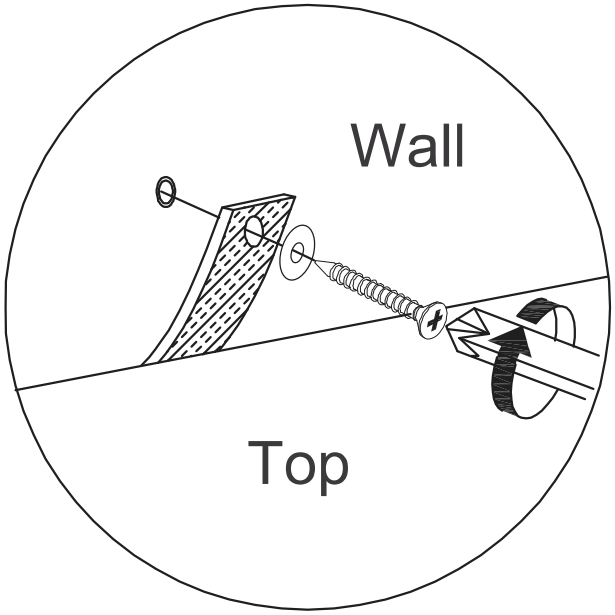

NEVADA 3+2 DRAWER CHEST ASSEMBLY INSTRUCTIONS

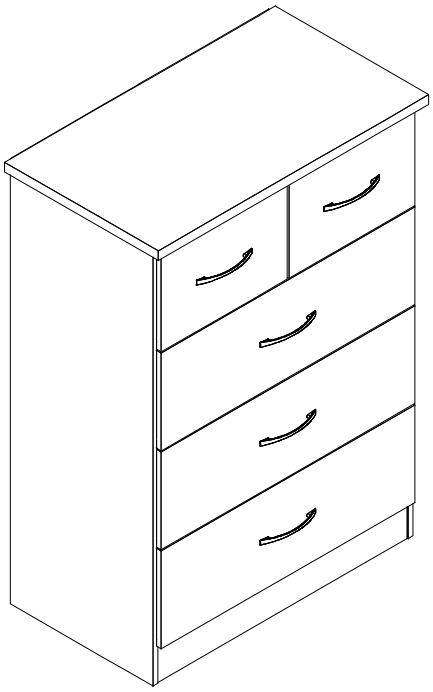

IMPORTANT

FOR DOMESTIC USE ONLY

PLEASE READ BEFORE YOU CONTINUE FURTHER

CARE AND MAINTENANCE

After unpacking this product please keep the original packaging in case it needs to be returned for any reason.

- Please ensure all fittings and parts are present before commencing with assembly.
- Never drag or push products as this could cause damage to the joints making it inferior.
- We strongly recommend that you keep children away from your work area.
- We recommend that you lay a blanket or sheet on the floor to avoid damage to both your floor and the product.
- Assemble this product as close to its final position as possible.
- Do not place this product next to a radiator or in direct sunlight.
- Do not drag or push items across your high gloss furniture as this may cause the surface to scratch
- Wood is a natural product and may expand if subjected to damp and may shrink or crack if subjected to heat. Therefore it is recommended that room temperature is maintained, with no sudden temperature fluctuations.
- Make sure any spillage is wiped off immediately.
- Do not place hot or chilled items directly on to the surface, use a place mat or marking will occur.
- For general cleaning use a soft cotton or micro fibre cloth, and do not use detergents of any kind.
- From time to time it may be necessary to tighten fittings, regular inspections should be carried out.
- Do not place on a wet or damp floor as staining may occur to your floor.

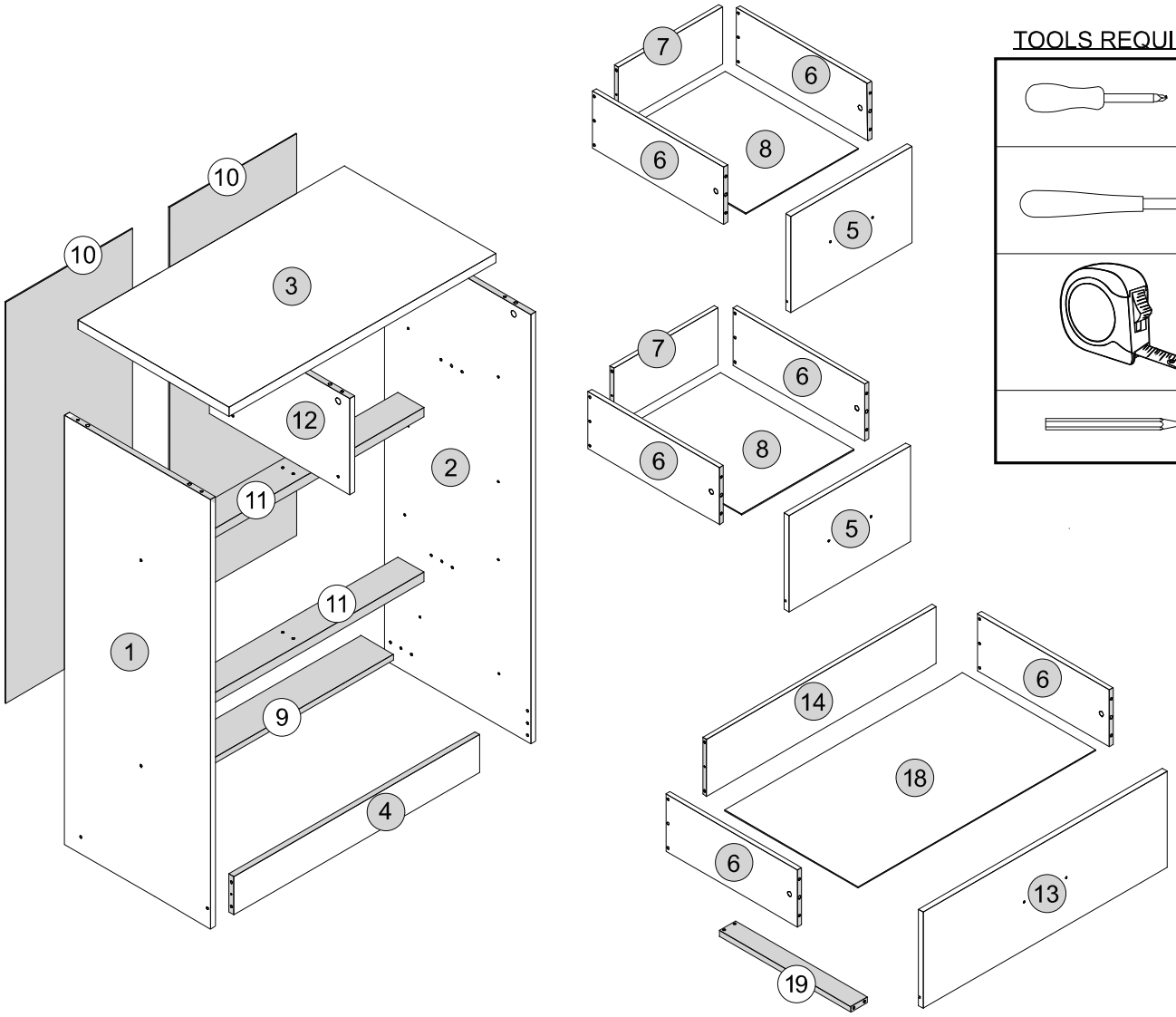

PARTS LIST

Please Note:
The below parts have all been stamped with the part number to help identify them during assembly.

Part Number	Part Description	Quantity	Carton
01	Left Side Panel	1	1/2
02	Right Side Panel	1	1/2
03	Top Panel	1	2/2
04	Front Baseboard	1	1/2
05	Small Drawer Front	1	2/2
06	Drawer Side	10	1/2
07	Small Drawer Back Panel	2	1/2
08	Small Drawer Bottom	2	1/2
09	Back Baseboard	1	1/2
10	Back Panel	1	1/2
11	Crossbar	2	2/2
12	Division Panel	1	1/2
13	Large Drawer Front	3	2/2
14	Large Drawer Back Panel	3	1/2
18	Large Drawer Bottom	3	2/2
19	Drawer Bottom Support Bar	3	1/2

FITTINGS LIST

A Flat Head Screw 2/+ Ø6,0 x 10mm (16x)	**B** Double Flat Head Screw 1/+ Ø4,0 x 18mm (2x)	**C** Flat Head Screw 2/+ Ø4,0 x 14mm (30x)	**D** Flan Head Screw 2/+ Ø4,0 x 20mm (10x)
E Flat Head Screw 1/+ Ø3,5 x 40mm (6x)	**F** Flat Head Screw 2/+ Ø4,0 x 50mm (19x)	**G** 2/+ Dowel Ø6,0 x 30mm (69x)	**H** 2/+ Nail 10x10 Ringed-1,5x23mm (84x)
I 1/+ Back Panel Bracket 14x14mm (2x)	**J** 2/+ Cam Nut Ø12x8,8MM (10x)	**K** 1/+ Washer ø16x7 (4x)	**L** 1/+ Plastic Foot L 19x17x8mm ø2 (6x)
M Flan Head Screw 1/+ Ø3,5 x 30mm (2x)	**N** 2/+ Cam Bolt (16x)	**O** 2/+ Hole Plugs 19MM (9x)	**P** GLUE Glue 10Gr (3x)
Q Drawer Runners 400MM (5x)	**R** Back Panel Strip H 799x19x3,8mm (1x)	**S** Strap 200x20x1MM (2x)	**T** Handle (5x)
U 1/+ Cam Nut Ø14,9x11MM (6x)	**V** +/2 Hole PlugsLíneo 19mm (9x)		

TIPS FOR FITTINGS CAM-LOCKS

WHEN FITTING CAM NUT. ENSURE STARTING POSITION IS CORRECT BEFORE YOU INSERT CONNECTING CAM BOLT TURN CLOCKWISE UNTIL SECURE

CORRECT WRONG

Cam bolt head needs to be in centre

CAMBOLT

Tighten until shoulder in flush with panel. Do not overtighten or undertighten (see example below)

Shoulder

Panel **Panel**

STEP 1

PARTS REQUIRED

1 - LEFT SIDE PANEL	x1

HARDWARE REQUIRED

G	Ø6 x 30	02
H	10 x 10	02
L		02
P	GLUE	01

TOOLS REQUIRED

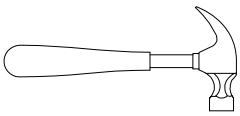

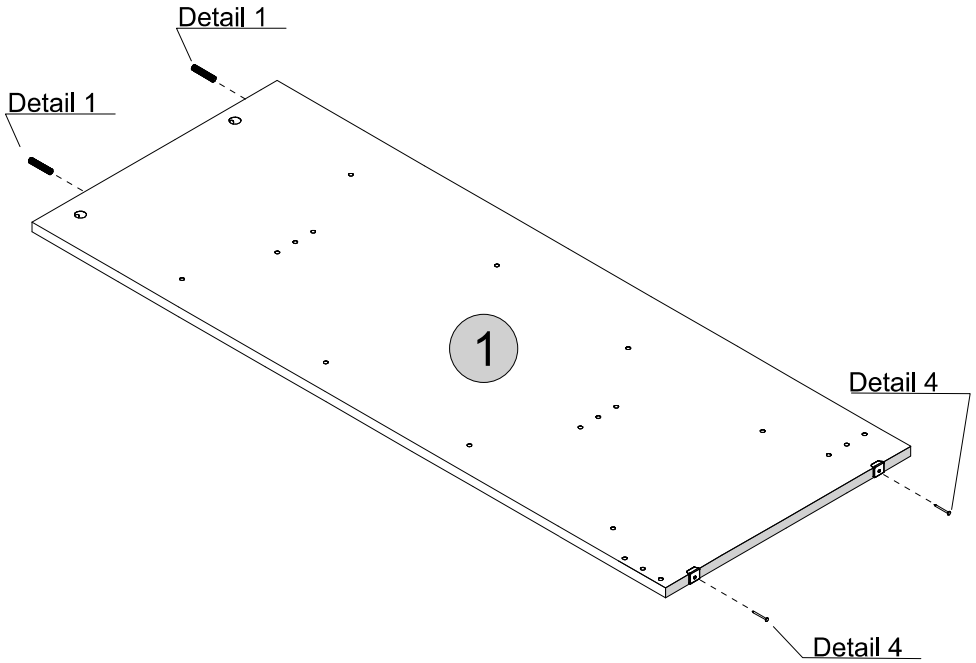

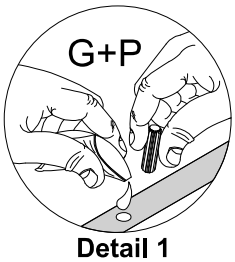

Detail 1

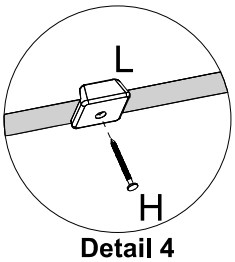

Detail 4

STEP 2

PARTS REQUIRED

2 - RIGHT SIDE PANEL	x1

HARDWARE REQUIRED

G	Ø6 x 30	02
H	10 x 10	02
L		02
P	GLUE	01

TOOLS REQUIRED

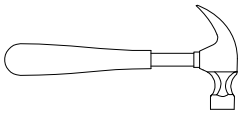

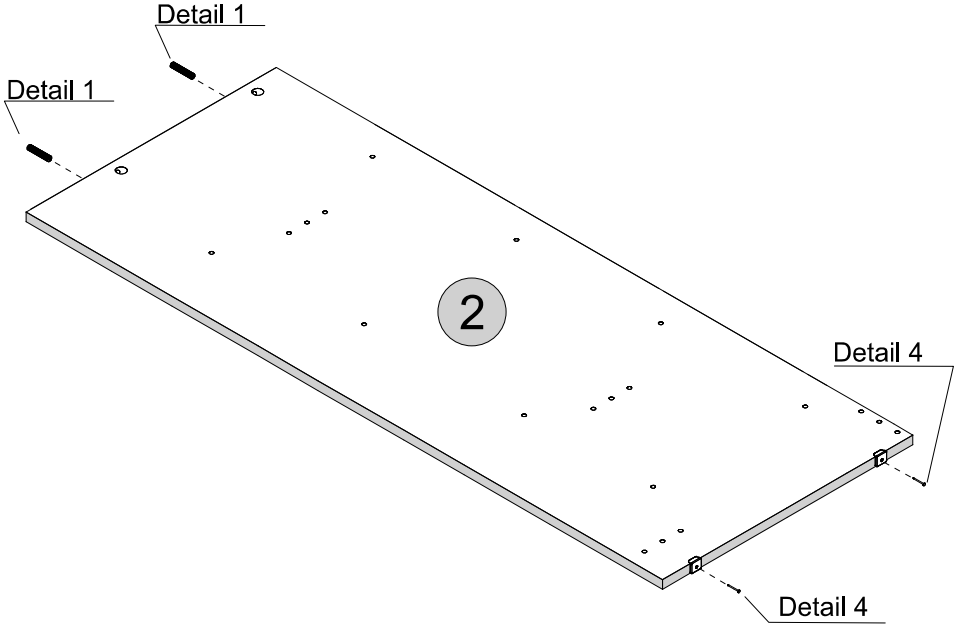

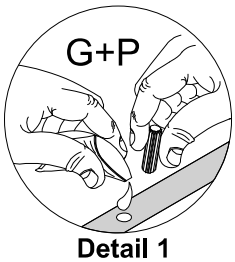

Detail 1

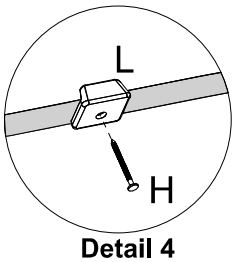

Detail 4

STEP 3

PARTS REQUIRED

1 - LEFT SIDE PANEL	x1

HARDWARE REQUIRED

A	Ø6 x 10	08
Q	LEFT	04

TOOLS REQUIRED

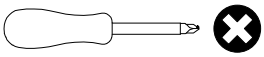

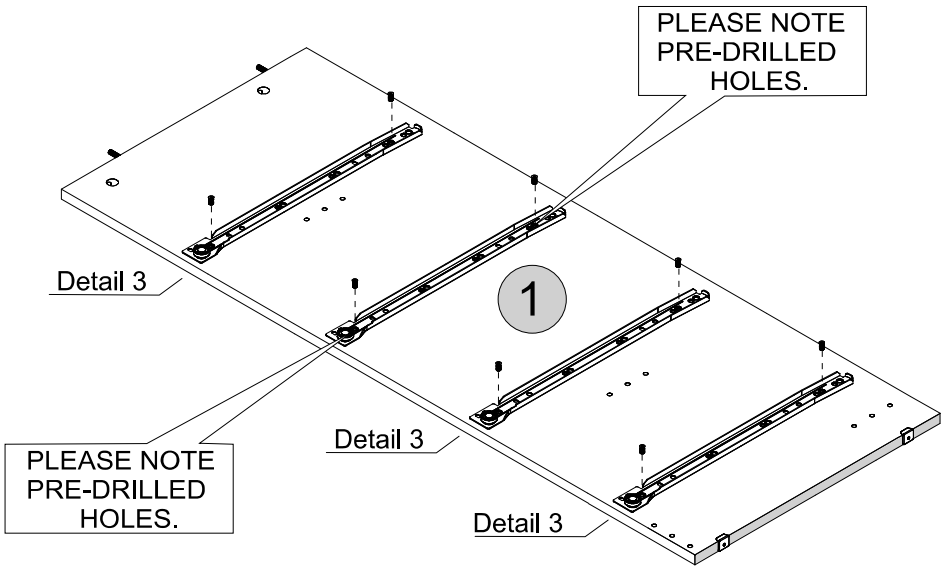

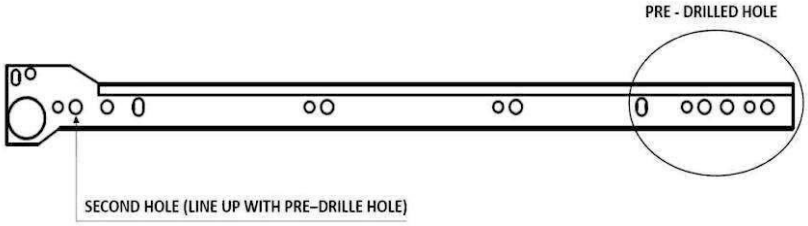

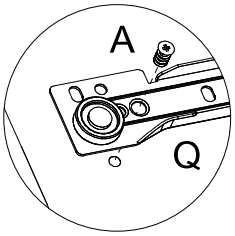

Detail 3

STEP 4

PARTS REQUIRED

2 - RIGHT SIDE PANEL	x1

HARDWARE REQUIRED

A	Ø6 x 10	08
Q	RIGHT	04

TOOLS REQUIRED

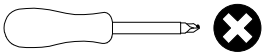

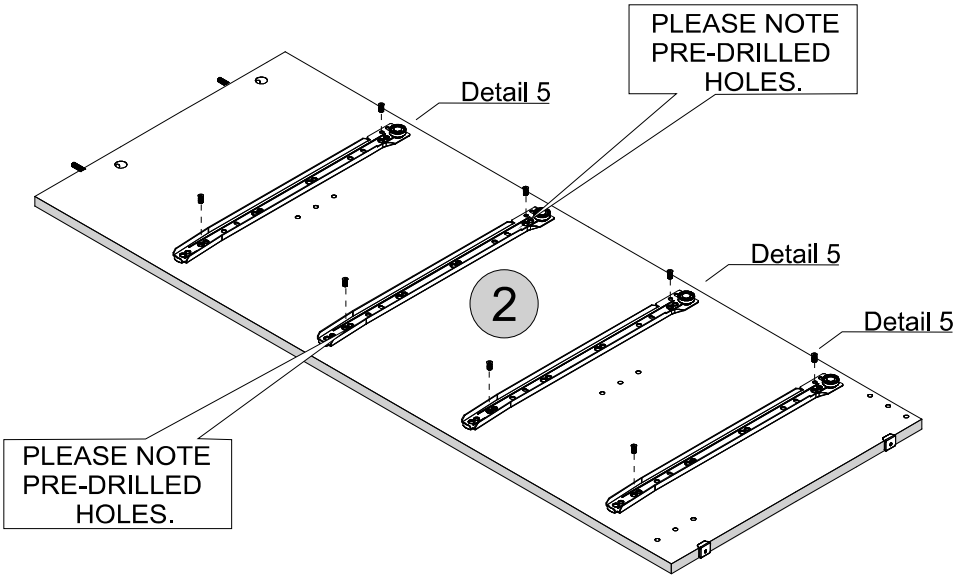

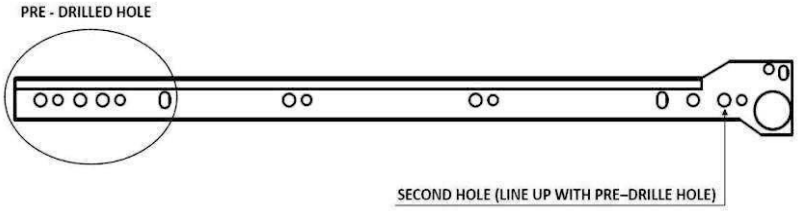

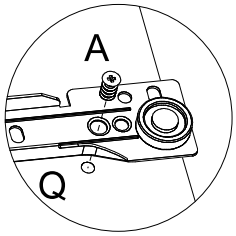

Detail 5

STEP 5

PARTS REQUIRED

4 - FRONT BASEBOARD	x1
9 - BACK BASEBOARD	x1
11 - CROSSBAR	x2

HARDWARE REQUIRED

G	Ø6 x 30	16
H	10 x 10	02
L		02
P	GLUE	01

TOOLS REQUIRED

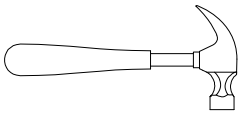

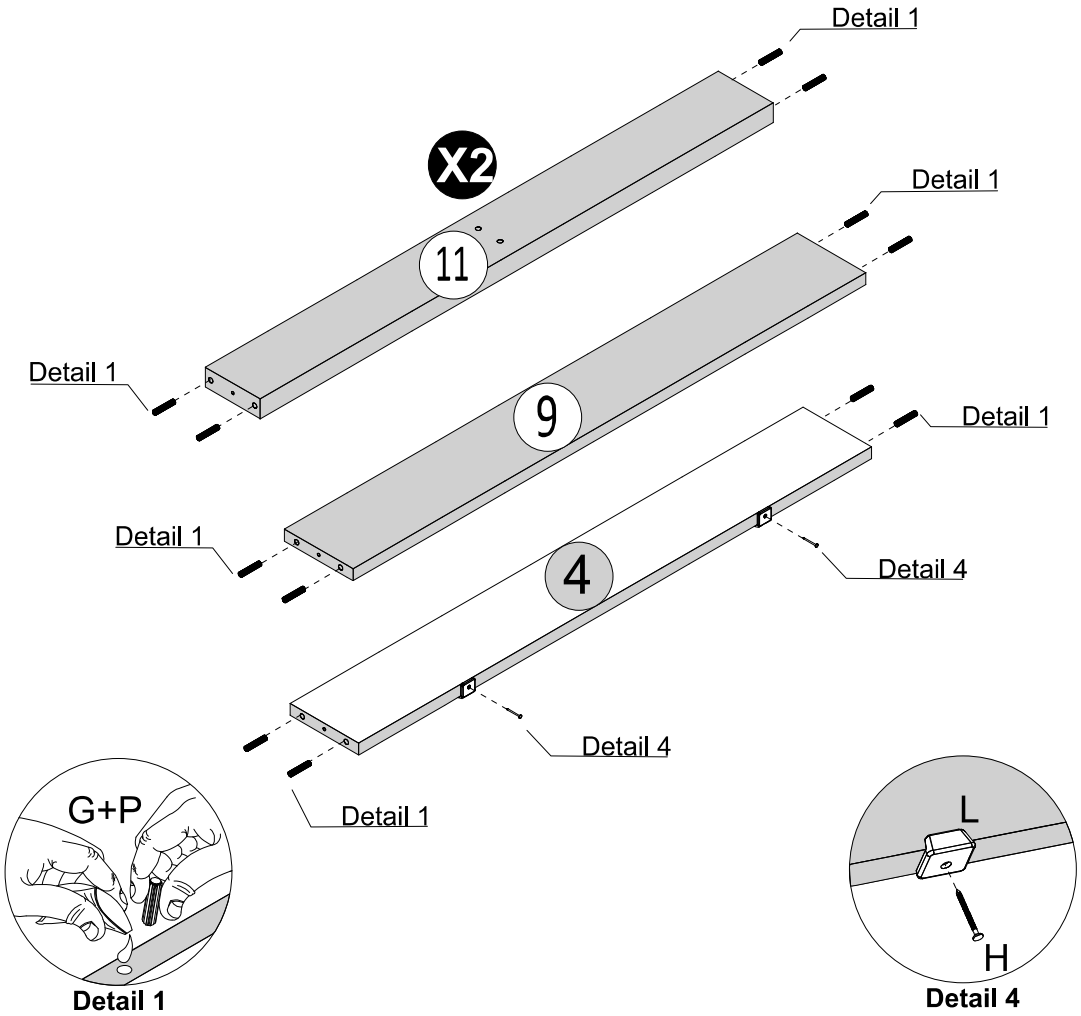

STEP 6

PARTS REQUIRED

12 - DIVISION PANEL	x1

HARDWARE REQUIRED

B	Ø4.0 x 18mm	02
G	Ø6 x 30	03
P	GLUE	01
Q	LEFT	01
Q	RIGHT	01

TOOLS REQUIRED

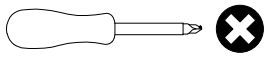

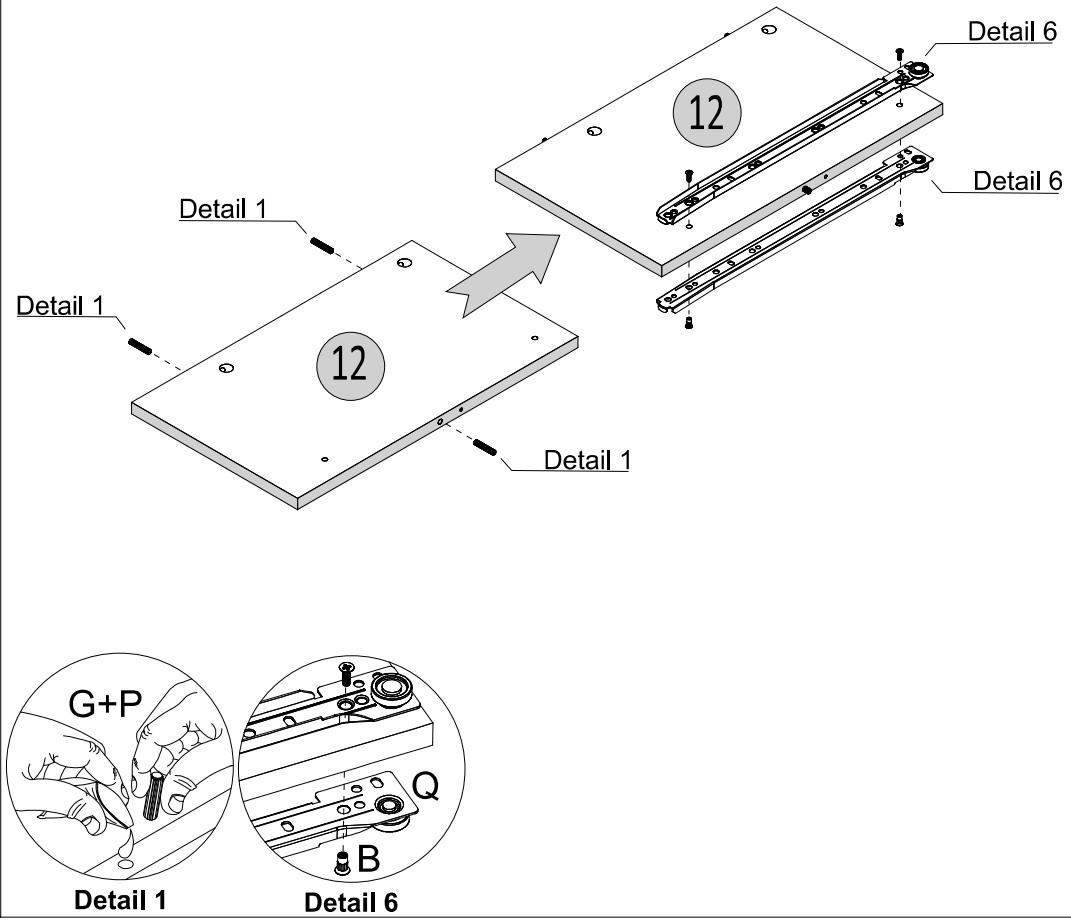

STEP 7

PARTS REQUIRED

2 -	RIGHT SIDE PANEL	x1
4 -	FRONT BASEBOARD	x1
9 -	BACK BASEBOARD	x1
11 -	CROSSBAR	x2

HARDWARE REQUIRED

F	Ø4 x 50	04
P	GLUE	01

TOOLS REQUIRED

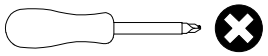

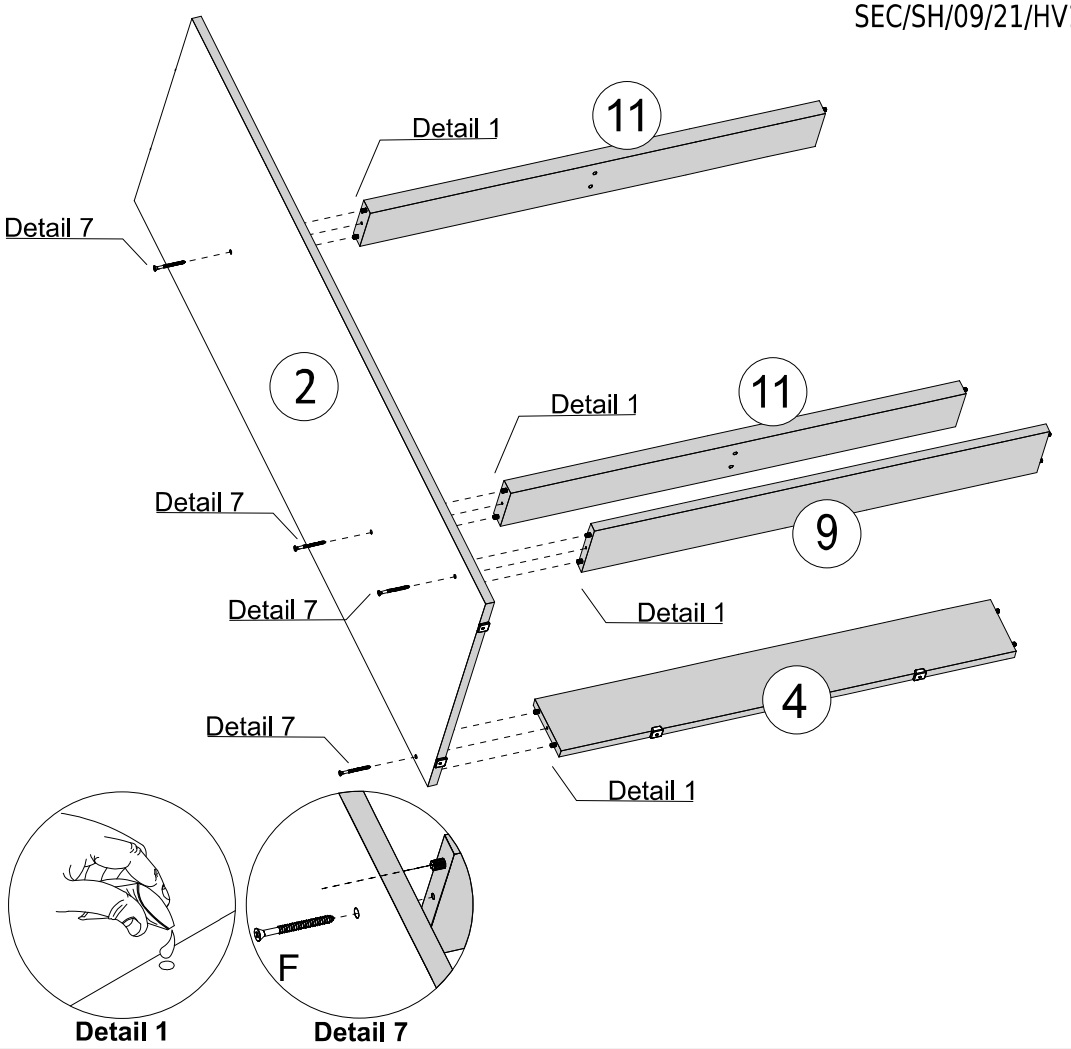

STEP 8

PARTS REQUIRED

1 -	LEFT SIDE PANEL	x1

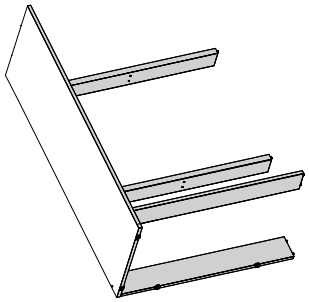

HARDWARE REQUIRED

F	Ø4 x 50	04
P	GLUE	01

TOOLS REQUIRED

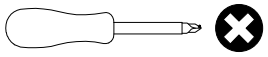

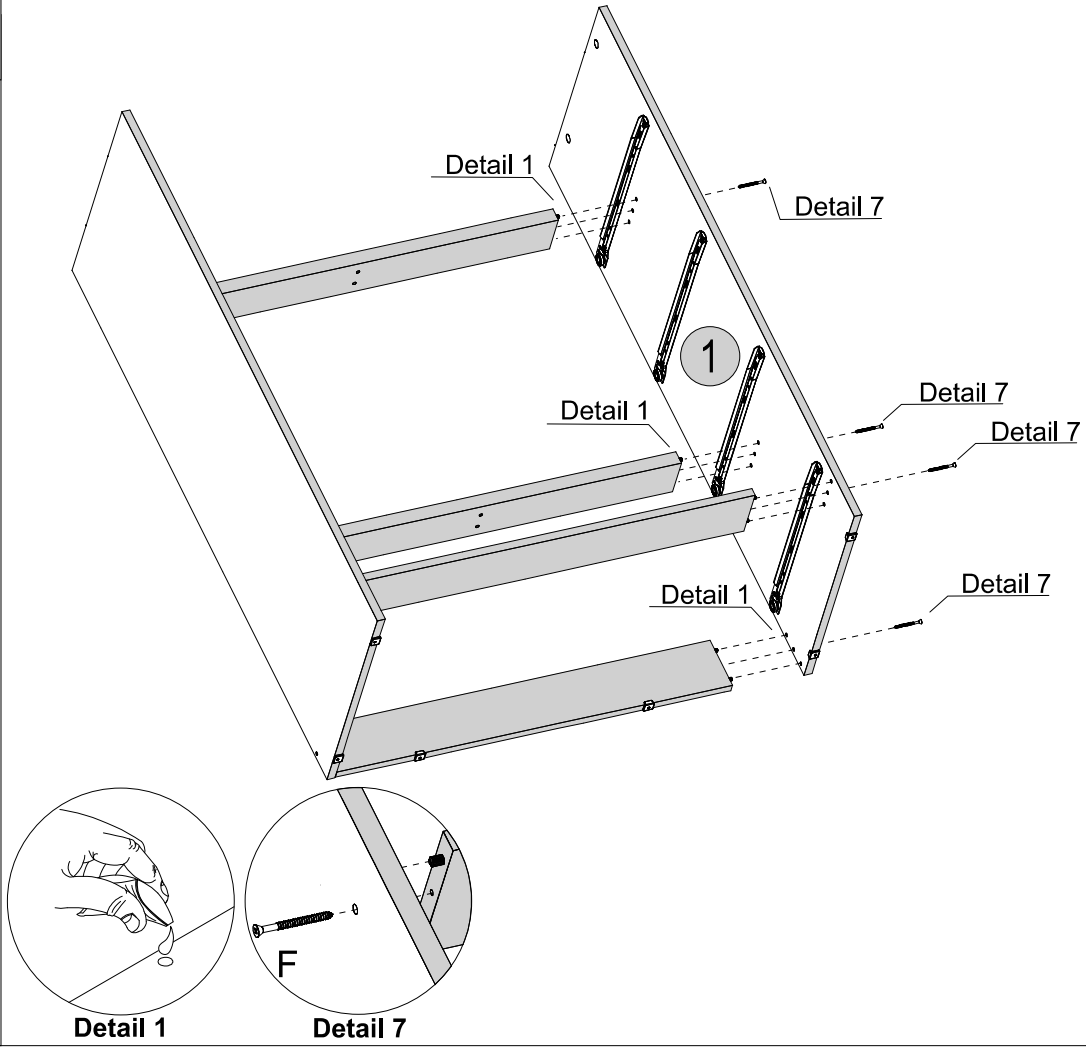

STEP 9

PARTS REQUIRED

3 - TOP PANEL	x1

HARDWARE REQUIRED

N	06

TOOLS REQUIRED

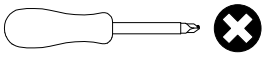

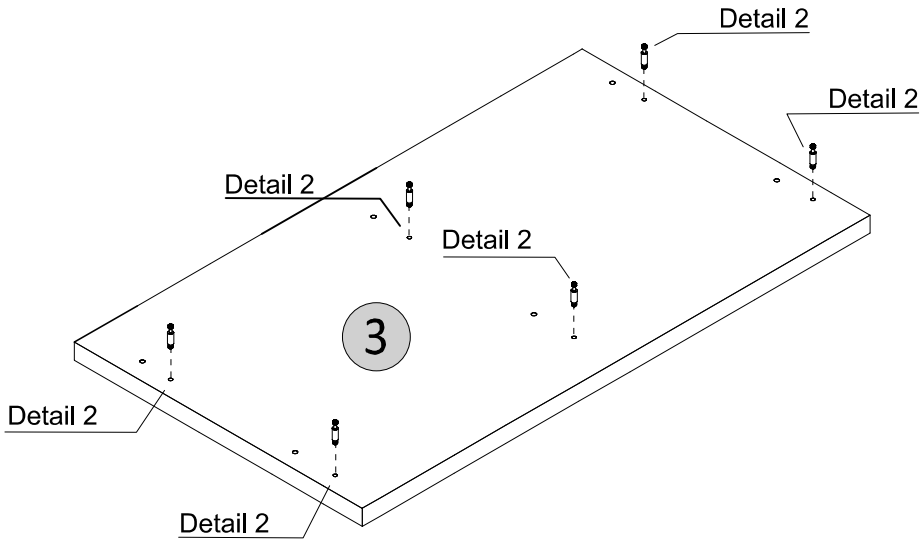

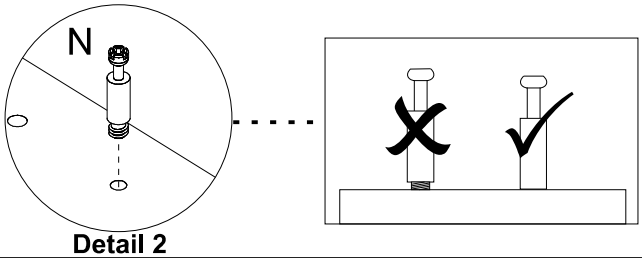

Detail 2

STEP 10

PARTS REQUIRED

3 - TOP PANEL	x1
12 - DIVISION PANEL	x1

HARDWARE REQUIRED

U	02

TOOLS REQUIRED

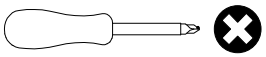

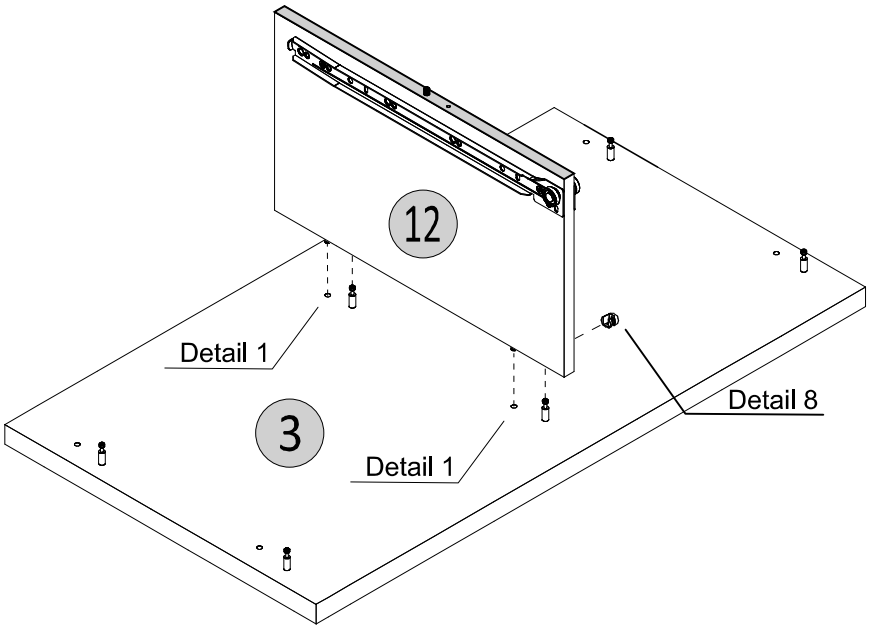

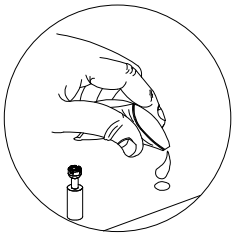

Detail 1

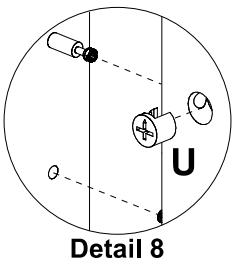

Detail 8

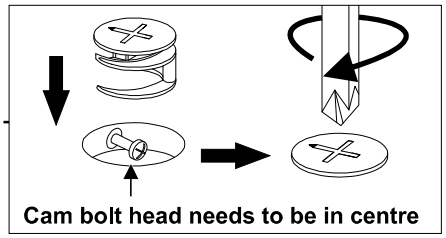

STEP 11

PARTS REQUIRED

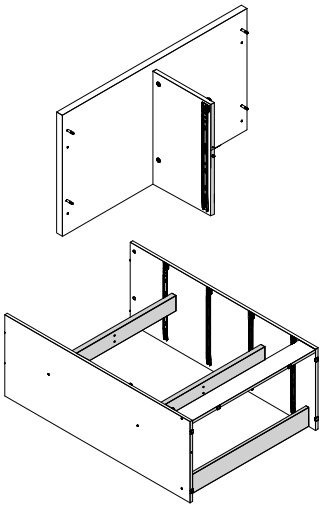

HARDWARE REQUIRED

F	Ø4 x 50	01
P	GLUE	01
U		04

TOOLS REQUIRED

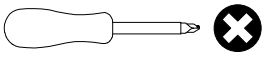

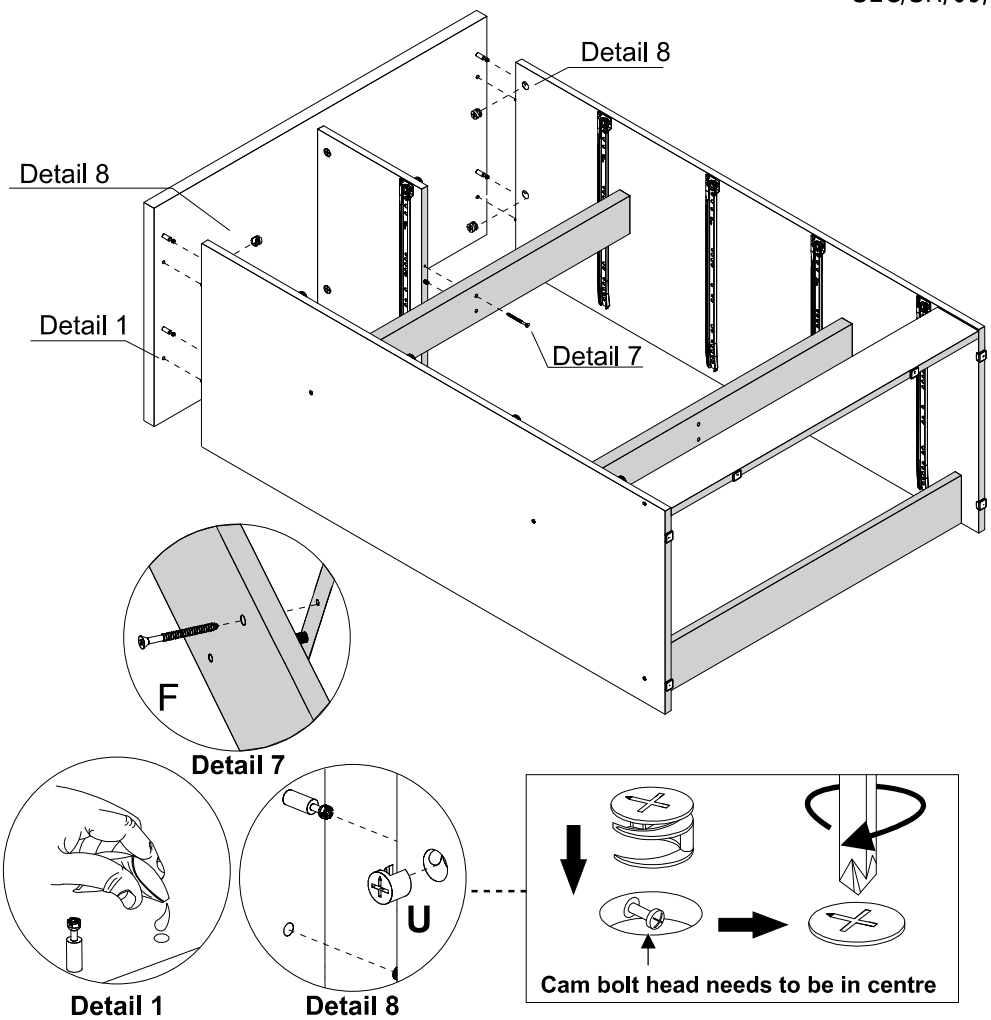

STEP 12

PARTS REQUIRED

10 -	BACK PANEL	x2

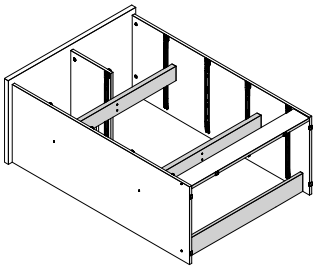

HARDWARE REQUIRED

H		32
I		02
R		01

TOOLS REQUIRED

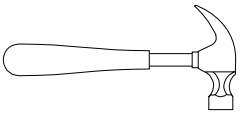

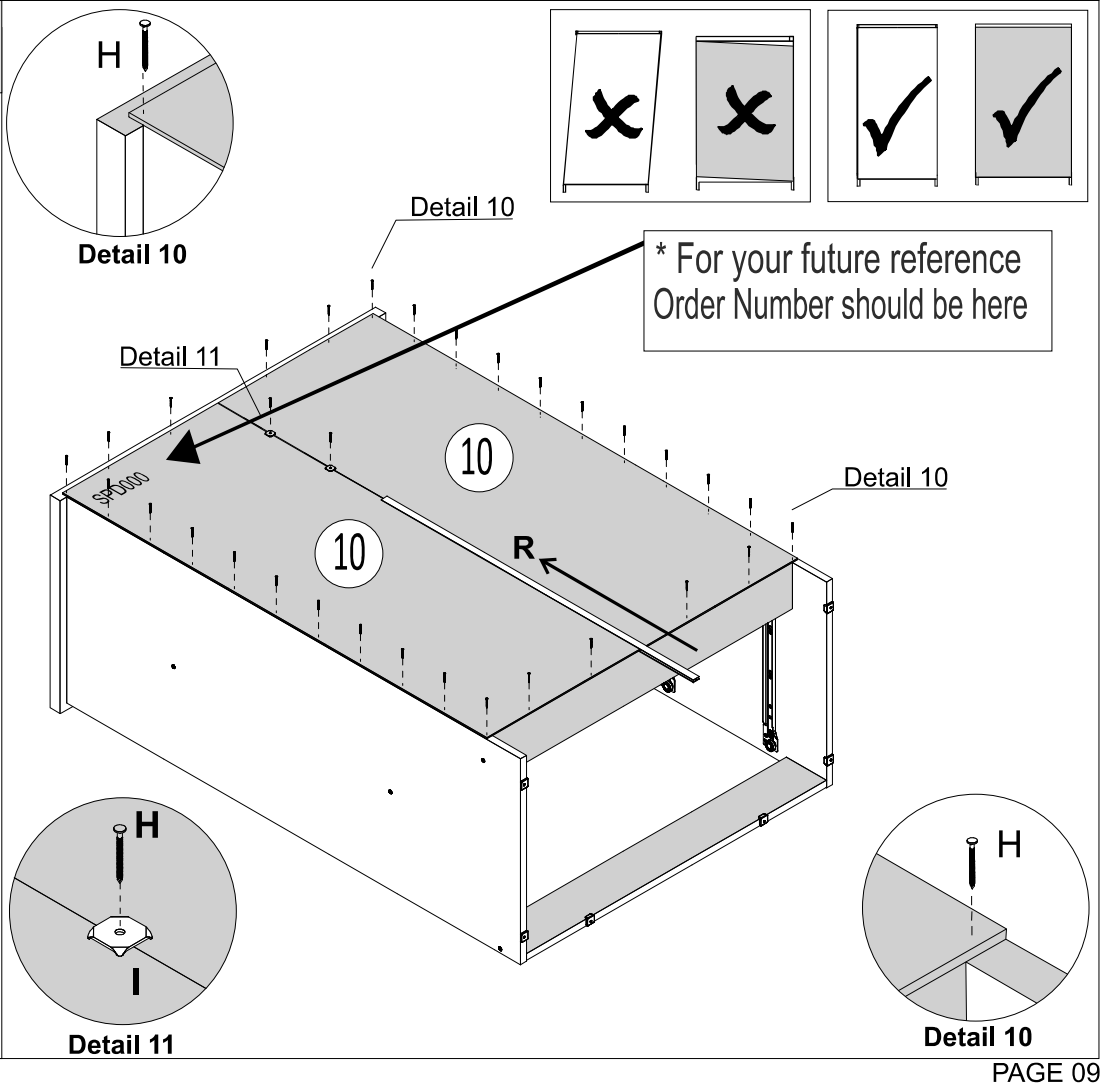

STEP 13

PARTS REQUIRED

6 - DRAWER SIDE	x10
7 - SMALL DRAWER BACK PANEL	x2
14 - LARGE DRAWER BACK PANEL	x3
19 - DRAWER BOTTOM SUPPORT BAR	x3

HARDWARE REQUIRED

G	Ø6 x 30	46
P	GLUE	01

TOOLS REQUIRED

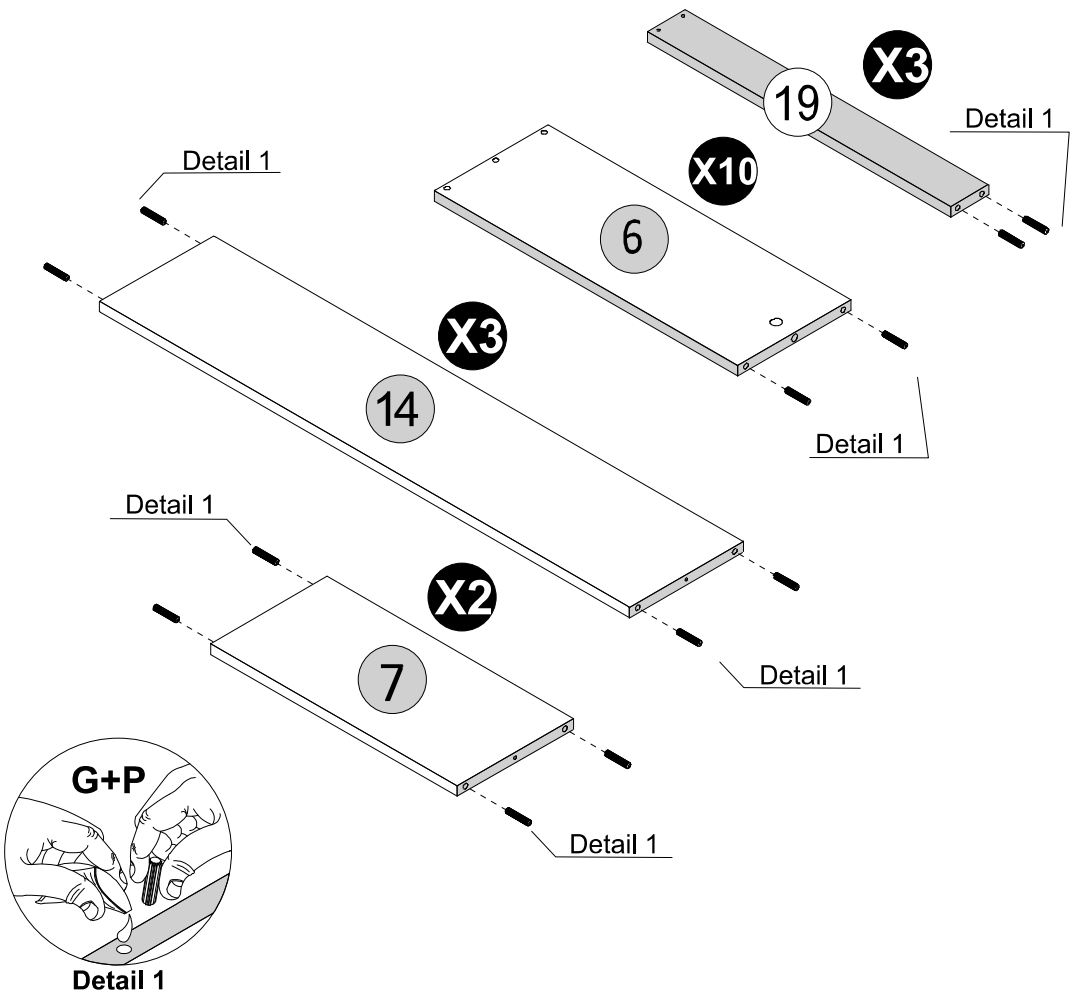

STEP 14

PARTS REQUIRED

13 - LARGE DRAWER FRONT	x3
5 - SMALL DRAWER FRONT	x2

HARDWARE REQUIRED

N		10

TOOLS REQUIRED

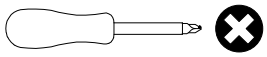

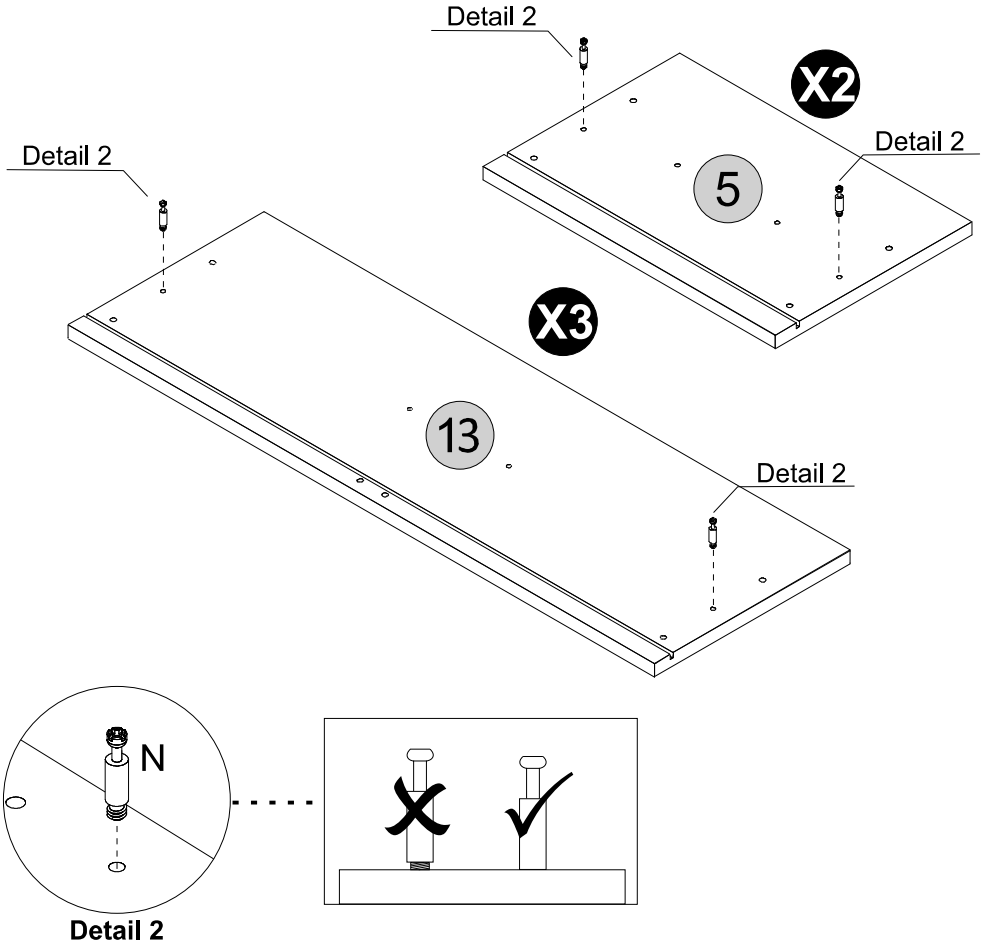

STEP 15

PARTS REQUIRED

6 - DRAWER SIDE	x6
14 - LARGE DRAWER BACK PANEL	x3

HARDWARE REQUIRED

F	Ø4 x 50	06

TOOLS REQUIRED

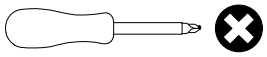

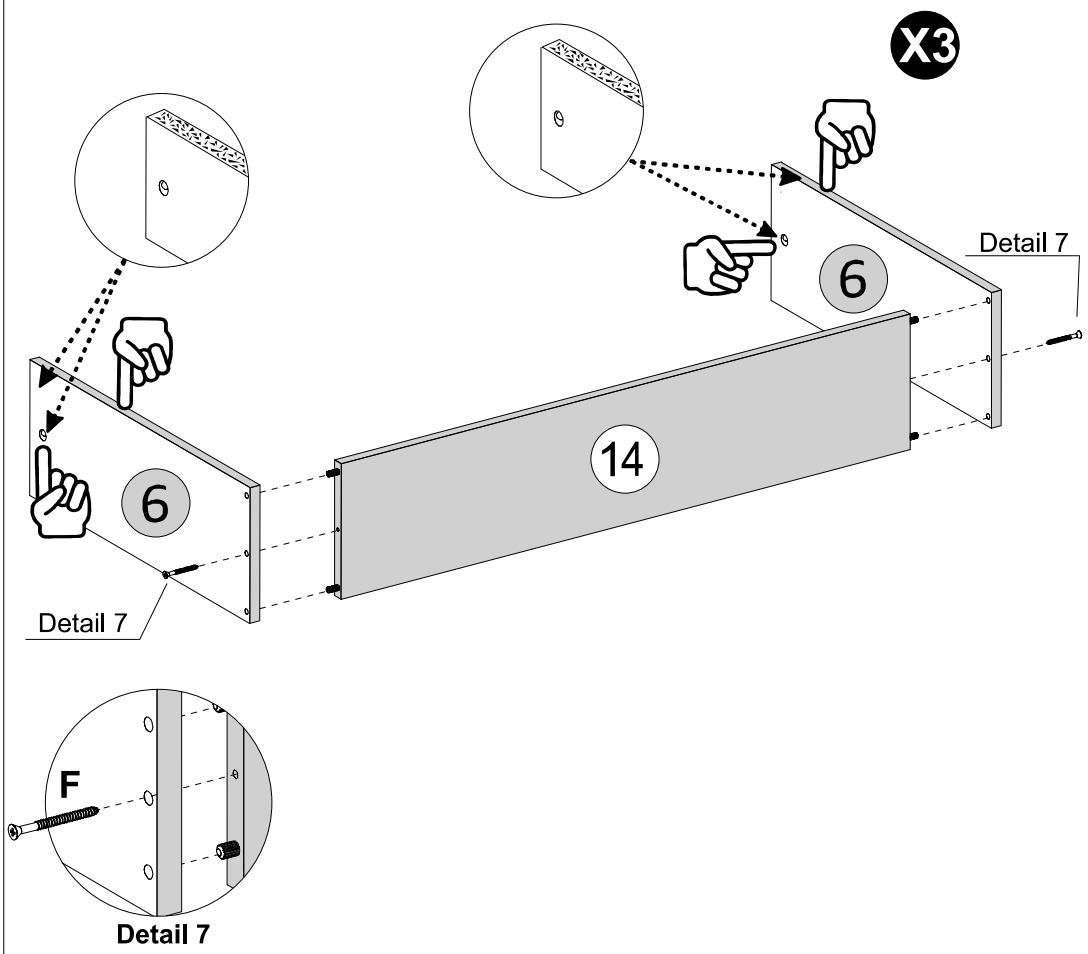

STEP 16

PARTS REQUIRED

13 - LARGE DRAWER FRONT	x3

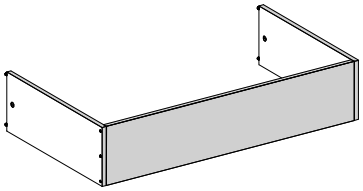

HARDWARE REQUIRED

J		06
P	GLUE	01

TOOLS REQUIRED

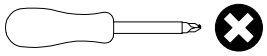

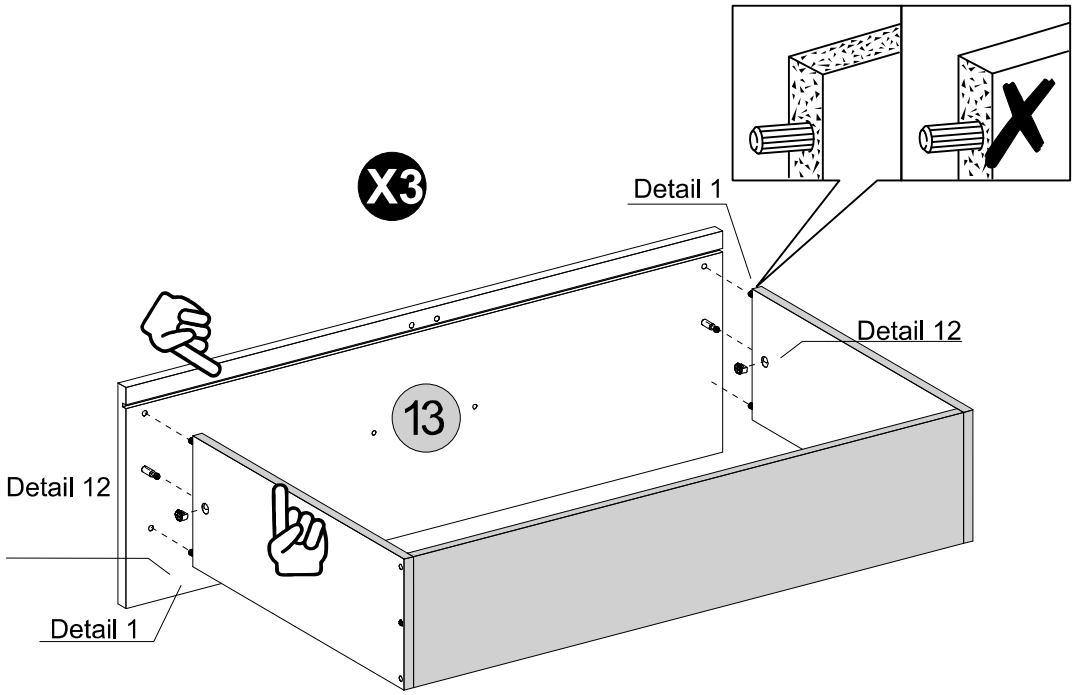

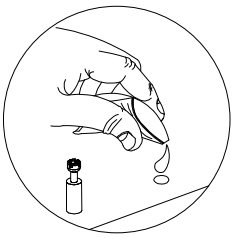

Detail 1

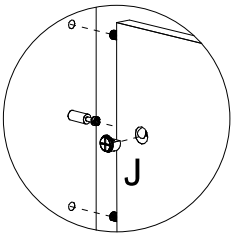

Detail 12

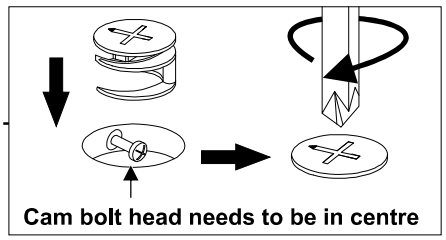

STEP 17

PARTS REQUIRED

18 -LARGE DRAWER BOTTOM x3

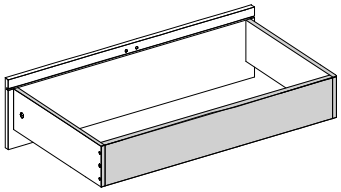

HARDWARE REQUIRED

H	10 x 10	12

TOOLS REQUIRED

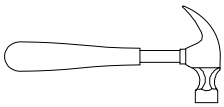

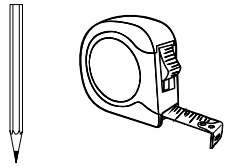

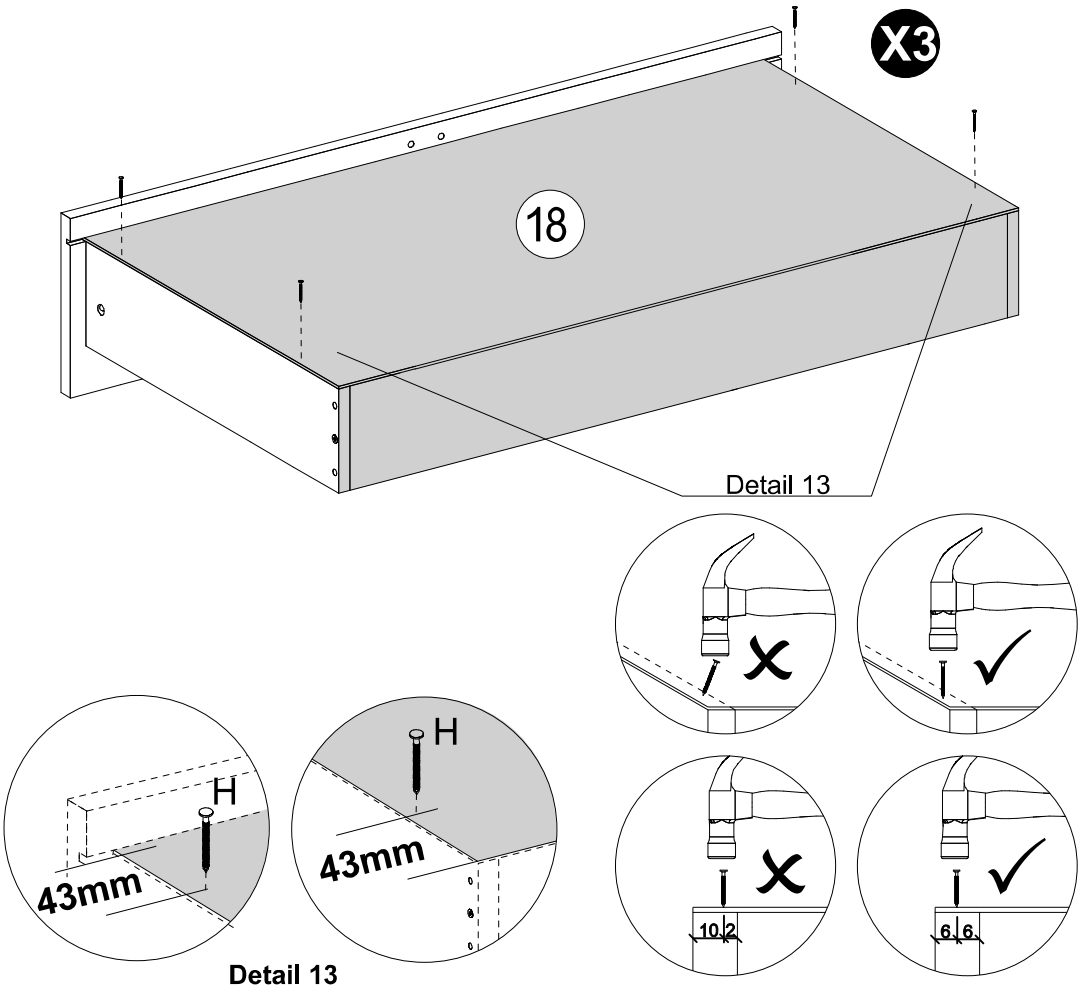

STEP 18

PARTS REQUIRED

19 -DRAWER BOTTOM SUPPORT BAR x3

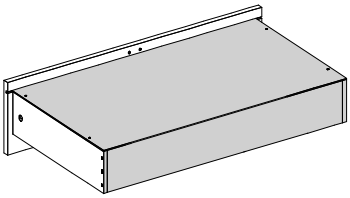

HARDWARE REQUIRED

H	10 x 10	18
P	GLUE	01

TOOLS REQUIRED

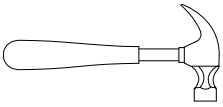

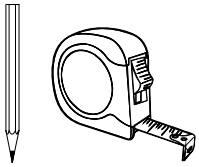

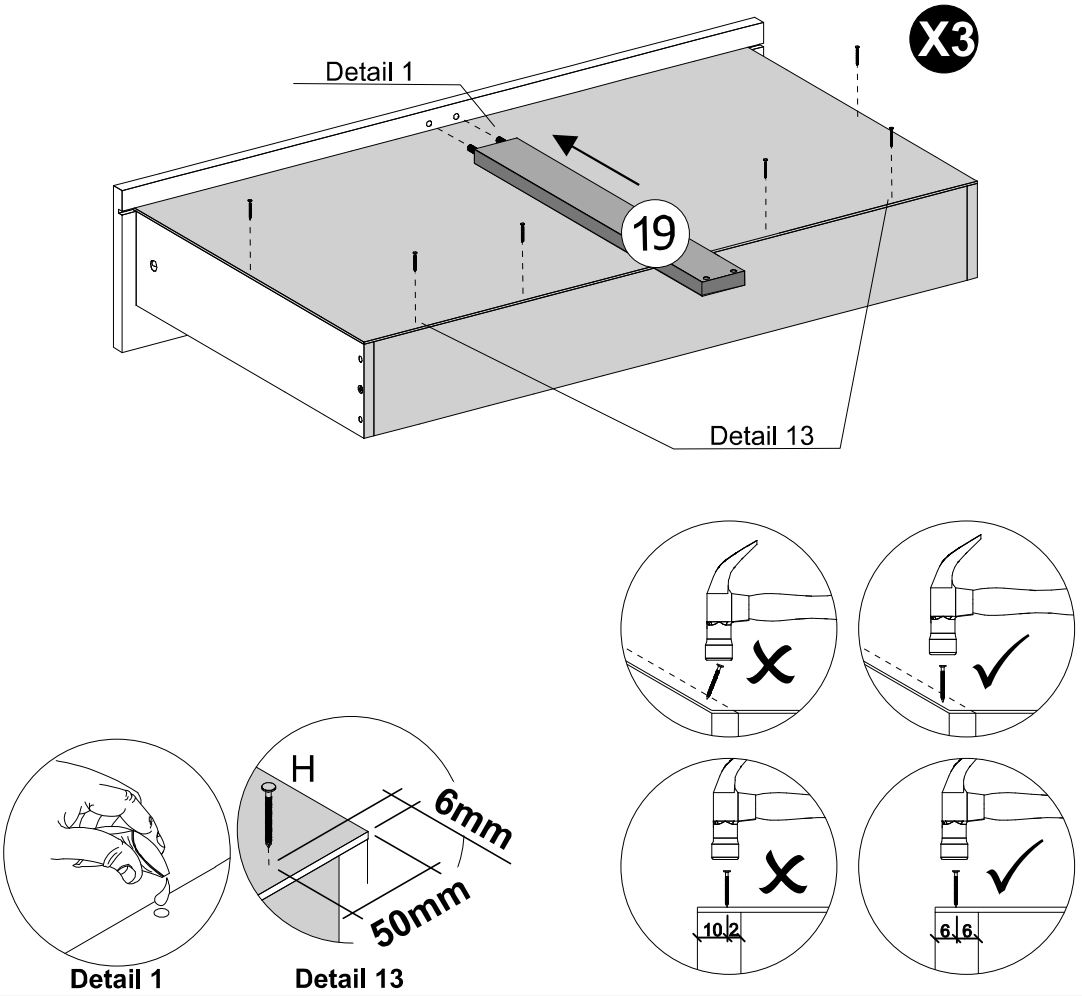

STEP 19

PARTS REQUIRED

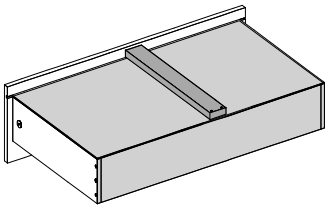

HARDWARE REQUIRED

C	Ø4,0 x 14mm	12
E	Ø3,5 x 40mm	06
Q	LEFT	03
Q	RIGHT	03

TOOLS REQUIRED

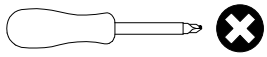

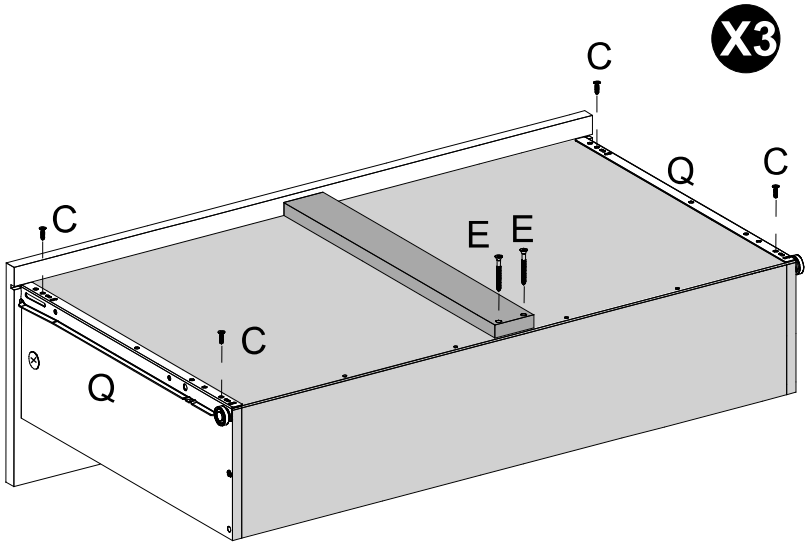

STEP 20

PARTS REQUIRED

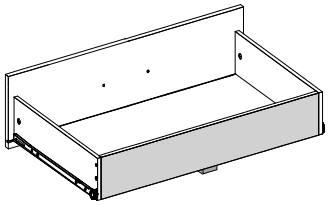

HARDWARE REQUIRED

D	4 x 22	06
T		03
V		06

TOOLS REQUIRED

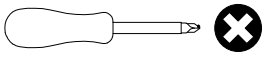

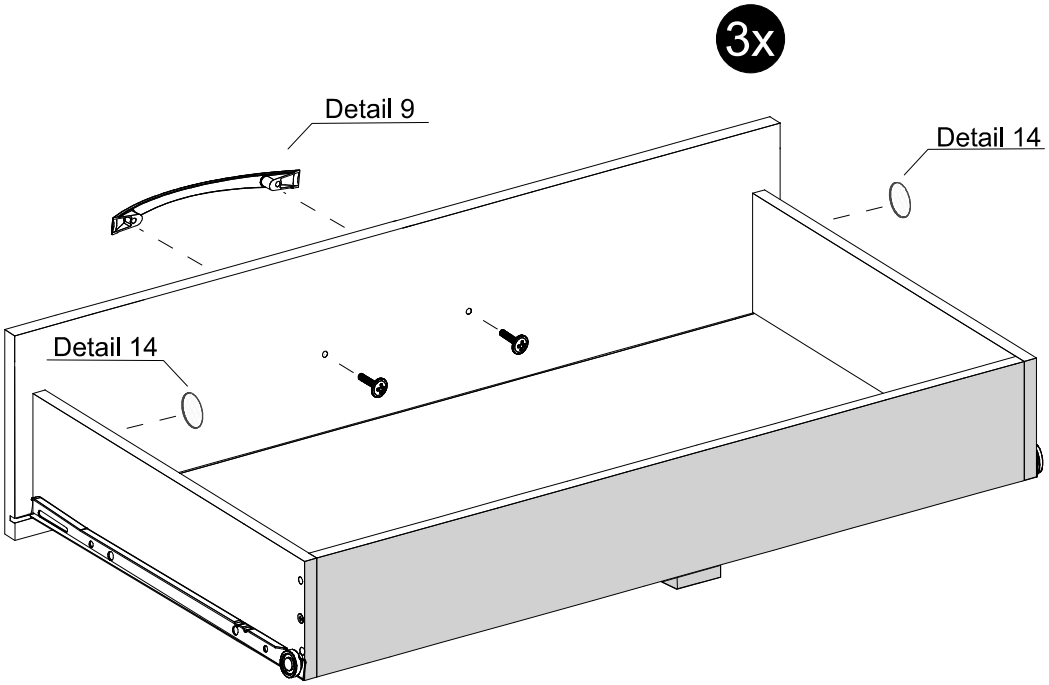

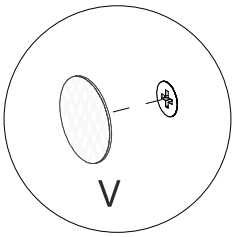

Detail 14

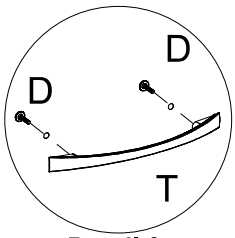

Detail 9

STEP 21

PARTS REQUIRED

6 - DRAWER SIDE	x6
7 -DRAWER BACK PANEL	x3

HARDWARE REQUIRED

F	Ø4 x 50	04

TOOLS REQUIRED

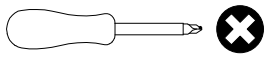

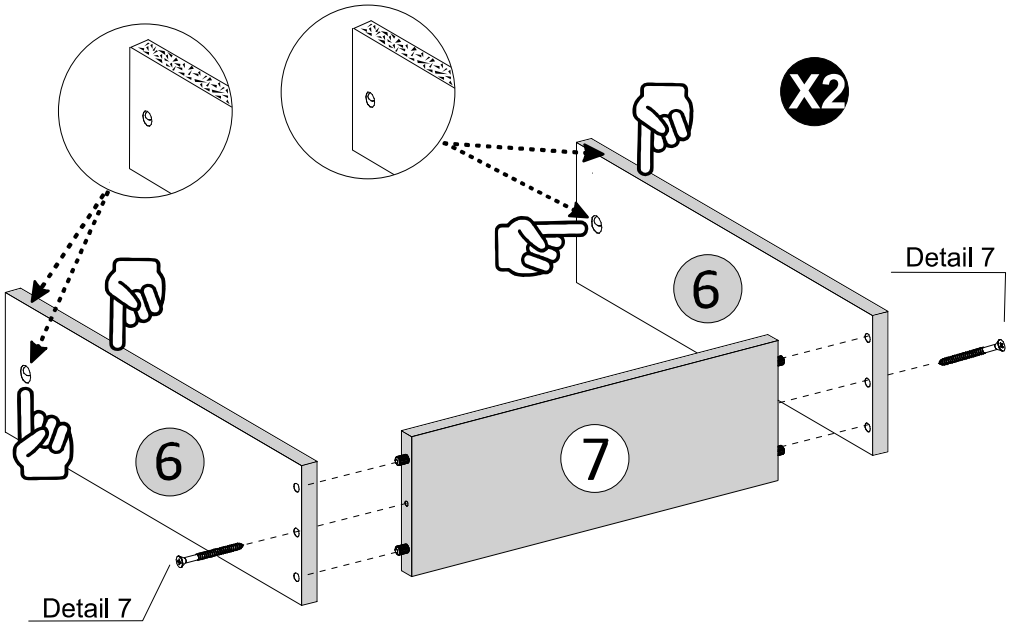

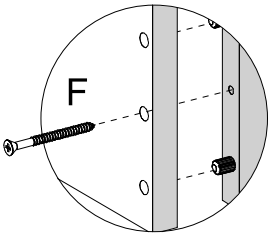

Detail 7

STEP 22

PARTS REQUIRED

5 - SMALL DRAWER FRONT	x3

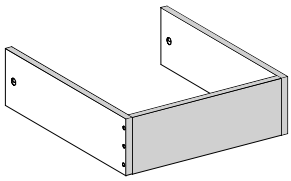

HARDWARE REQUIRED

J		04
P	GLUE	01

TOOLS REQUIRED

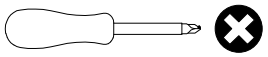

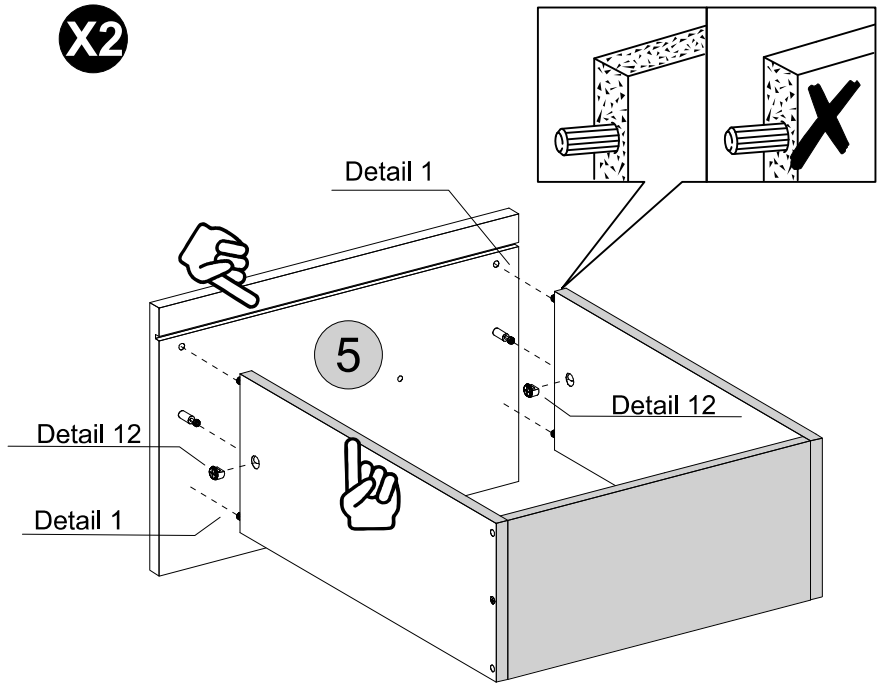

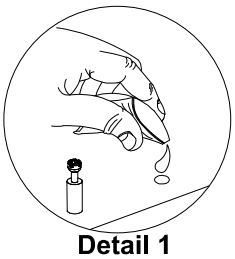

Detail 1

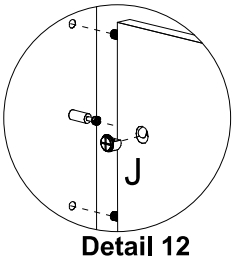

Detail 12

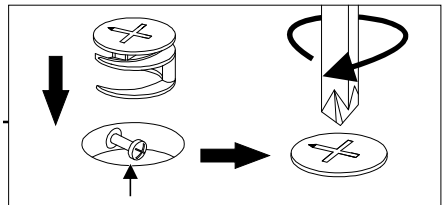

Cam bolt head needs to be in centre

STEP 23

PARTS REQUIRED

8 - DRAWER BOTTOM	x2

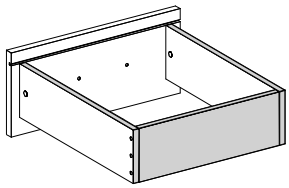

HARDWARE REQUIRED

H	10 x 10	08

TOOLS REQUIRED

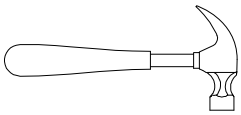

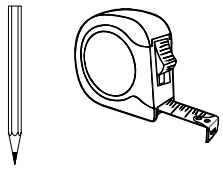

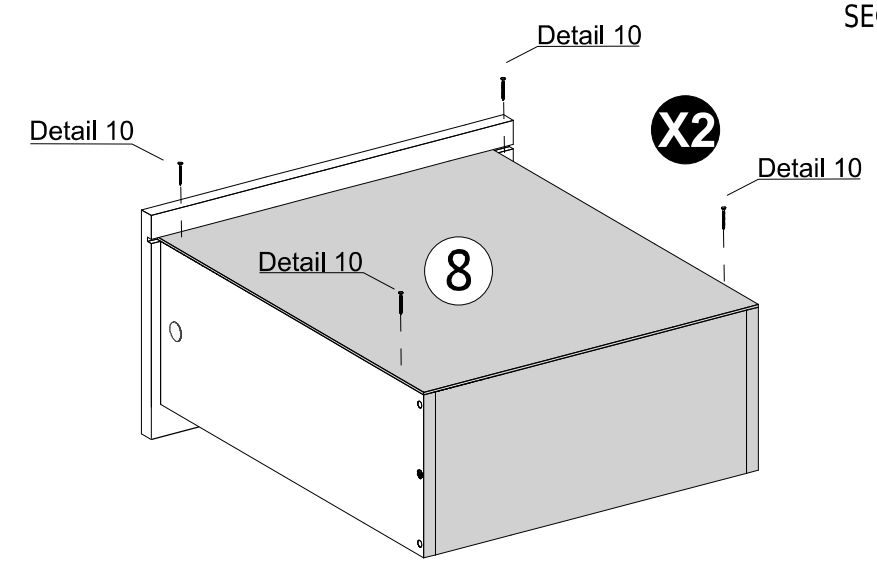

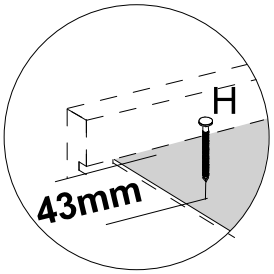

Detail 10

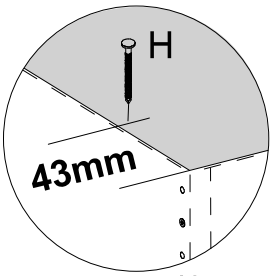

Detail 10

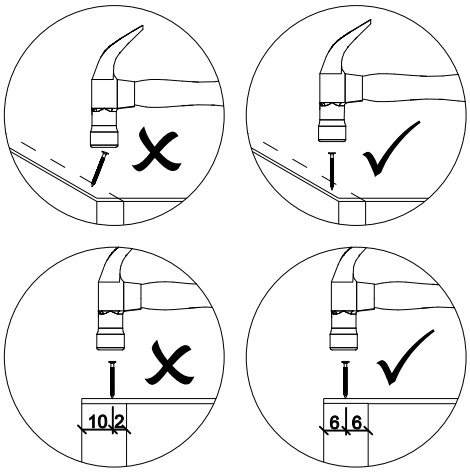

STEP 24

PARTS REQUIRED

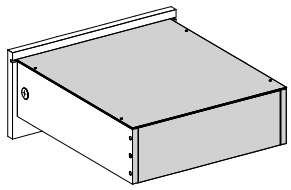

HARDWARE REQUIRED

H	10 x 10	08

TOOLS REQUIRED

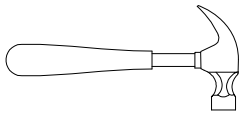

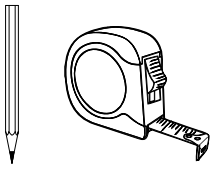

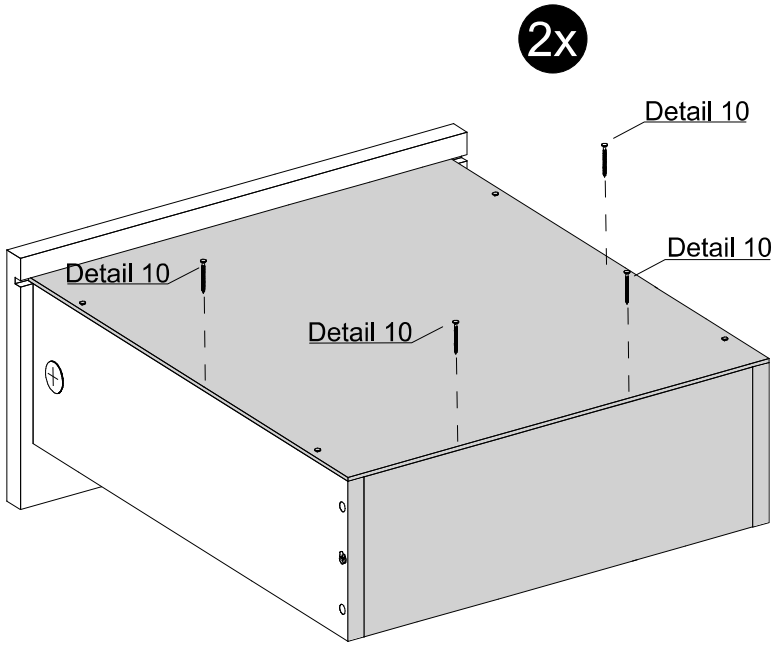

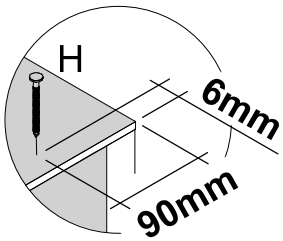

Detail 10

STEP 25

PARTS REQUIRED

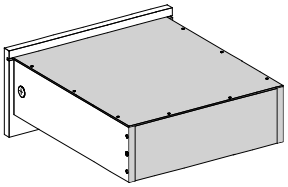

HARDWARE REQUIRED

C	Ø4,0 x 14mm	08
Q	LEFT	02
Q	RIGHT	02

TOOLS REQUIRED

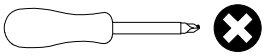

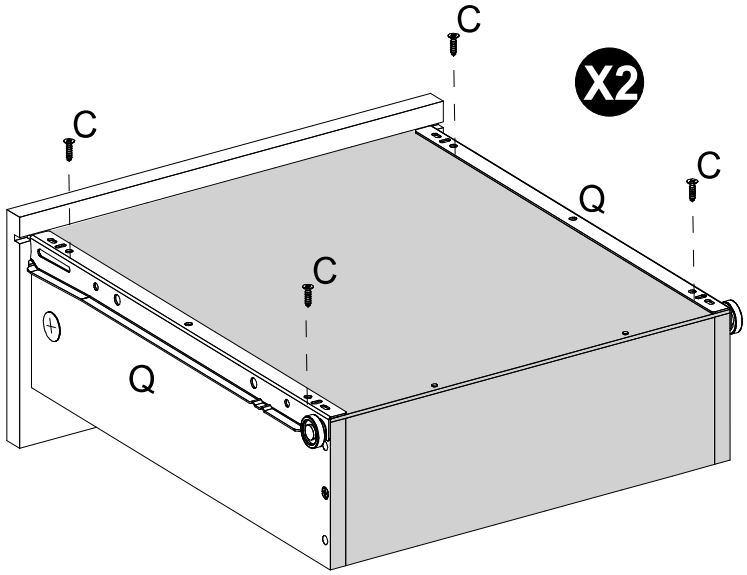

STEP 26

PARTS REQUIRED

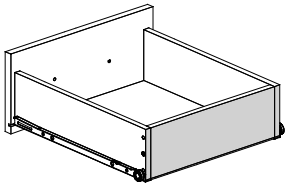

HARDWARE REQUIRED

D	4 x 22	04
V		04
T		02

TOOLS REQUIRED

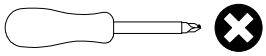

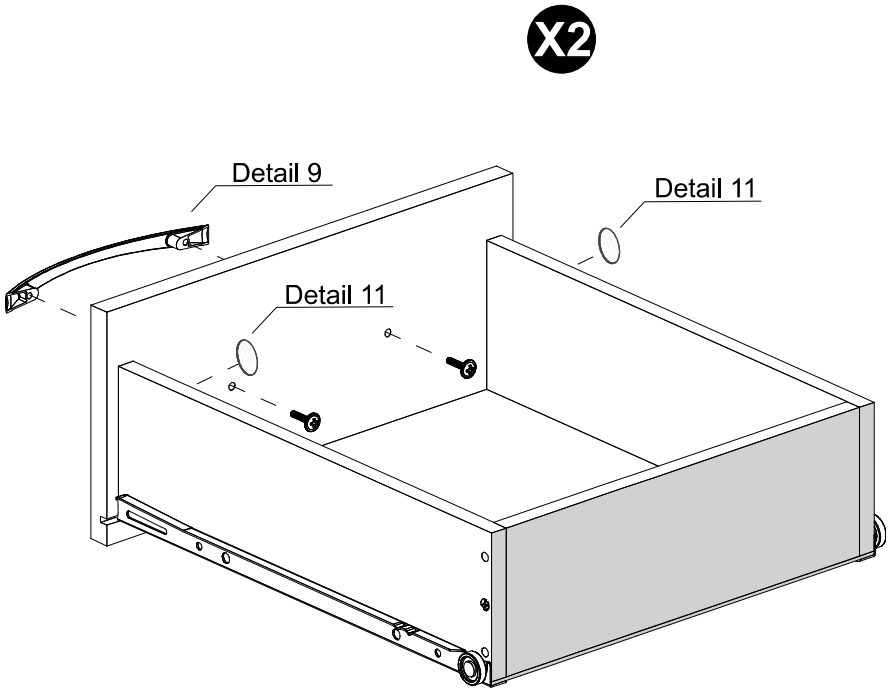

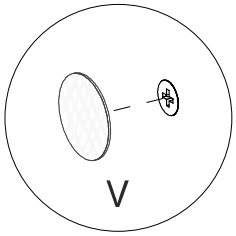

Detail 11

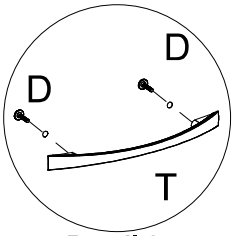

Detail 9

STEP 27

PARTS REQUIRED

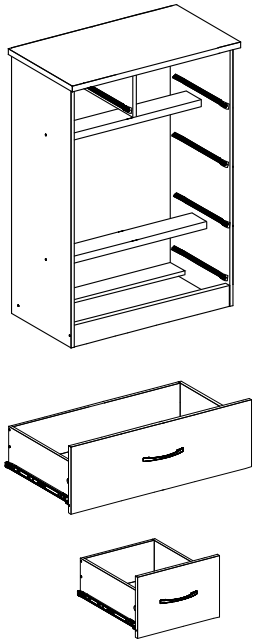

HARDWARE REQUIRED

O		08

TOOLS REQUIRED

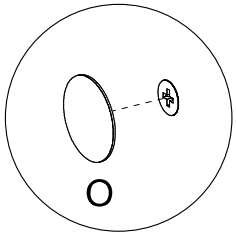

Detail 14

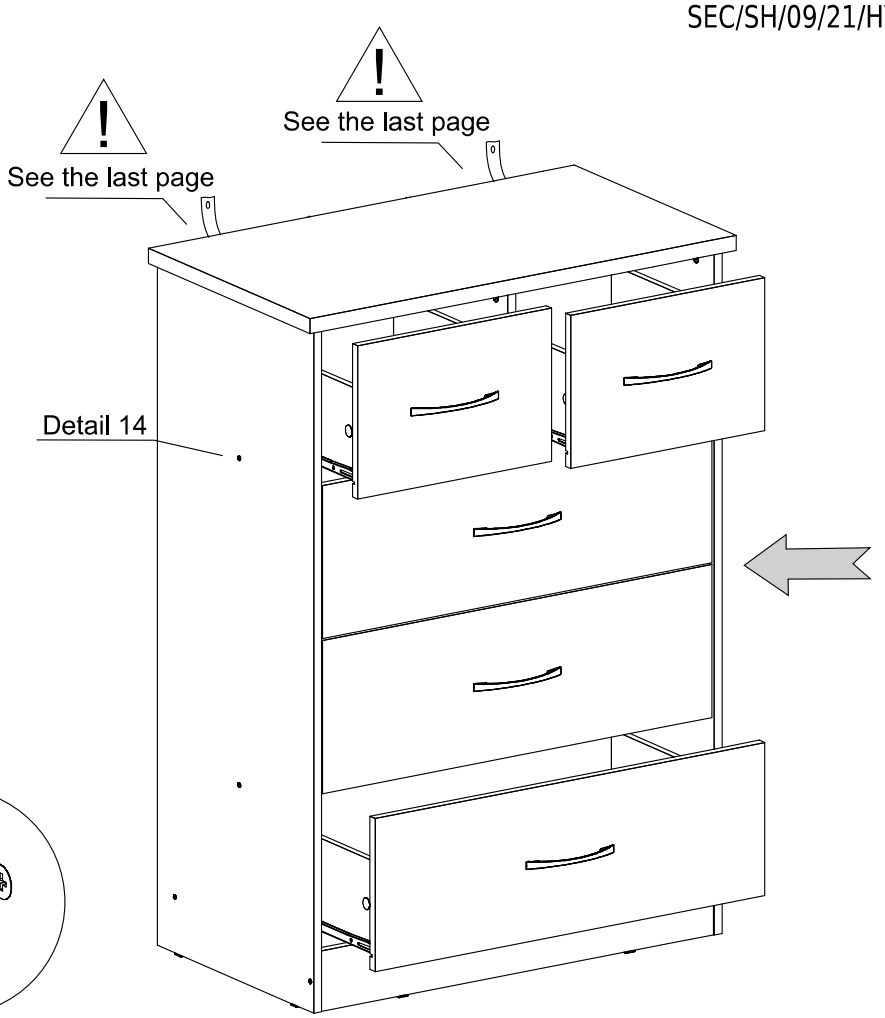

STEP 28

PARTS REQUIRED

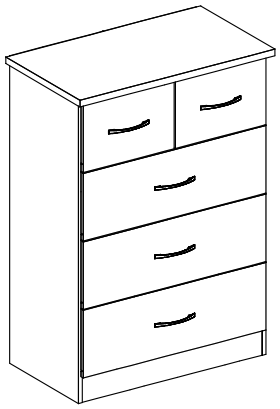

HARDWARE REQUIRED

C	Ø4,0 x 14mm	10

TOOLS REQUIRED

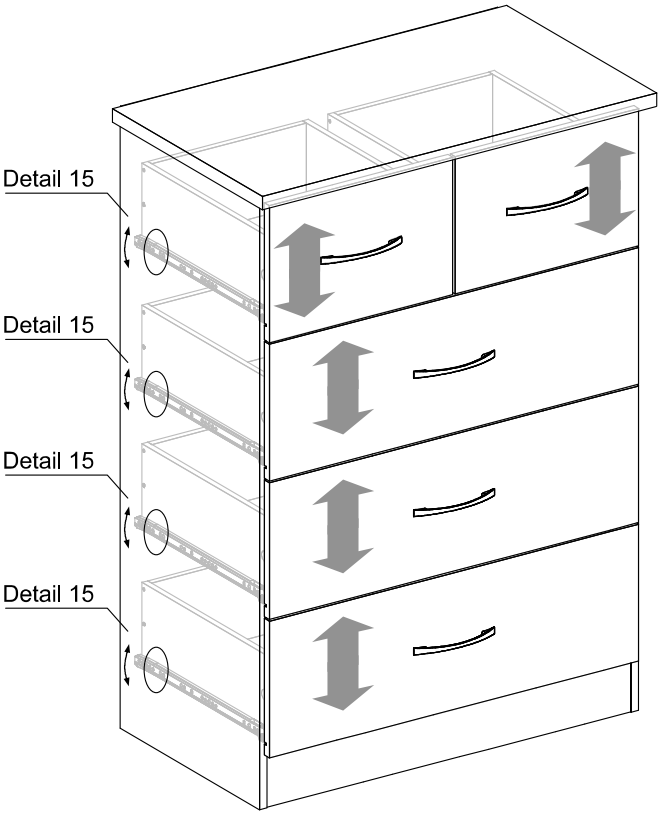

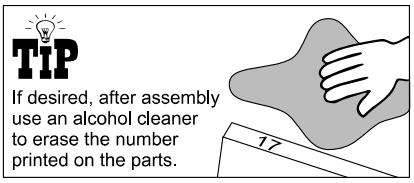

Drawer Adjustment

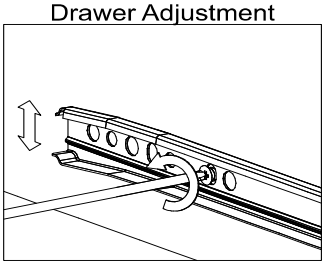

Right Side

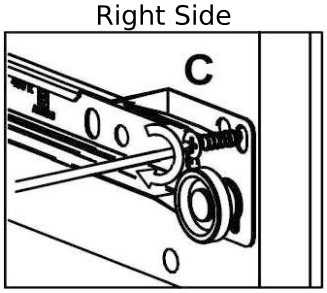

Left Side

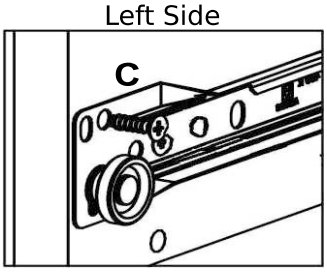

Detail 15

WARNING

Serious or fatal injuries can occur from furniture tipping over. To prevent the furniture from tipping over we recommend that it is permanently fixed to the wall.

Wall fixings are not supplied with this product as different wall materials require different types of fixing devices.
Please make sure you use fixings suitable for the walls in your home.

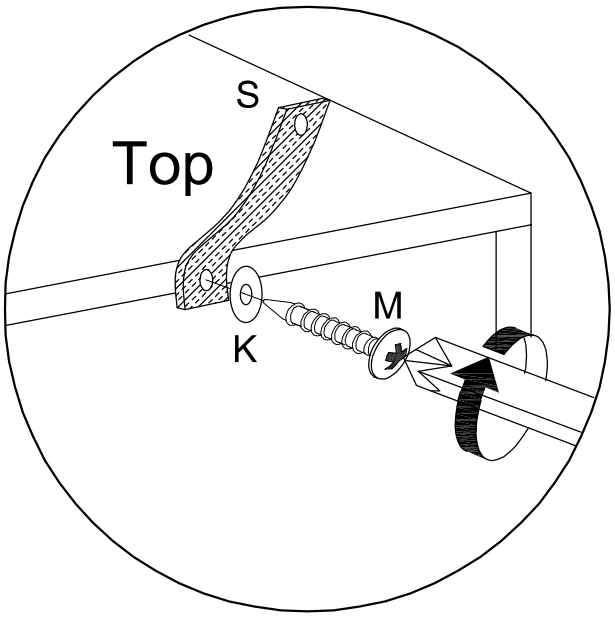

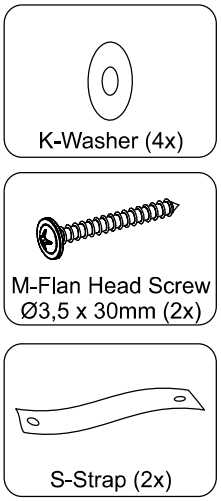

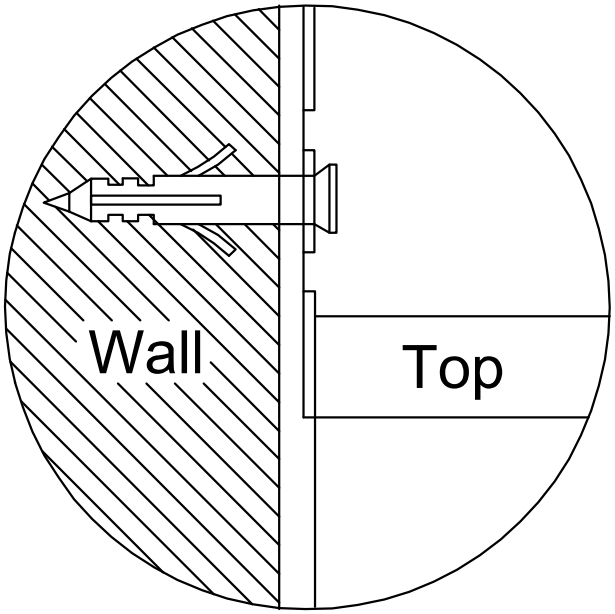

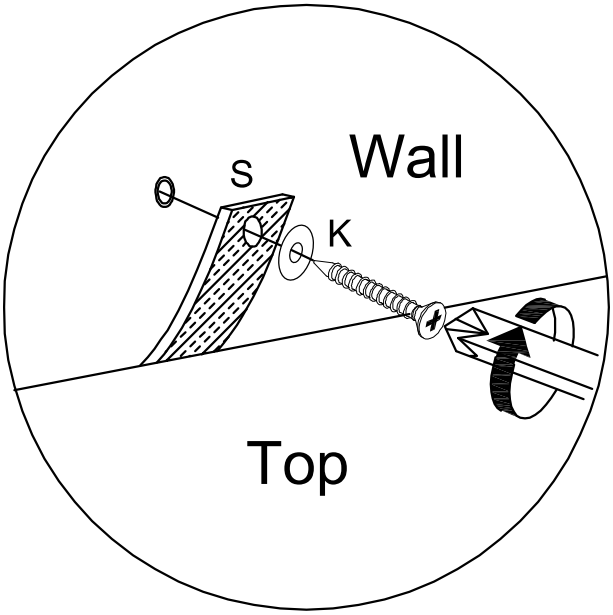

NEVADA 3 DRAWER BEDSIDE ASSEMBLY INSTRUCTIONS

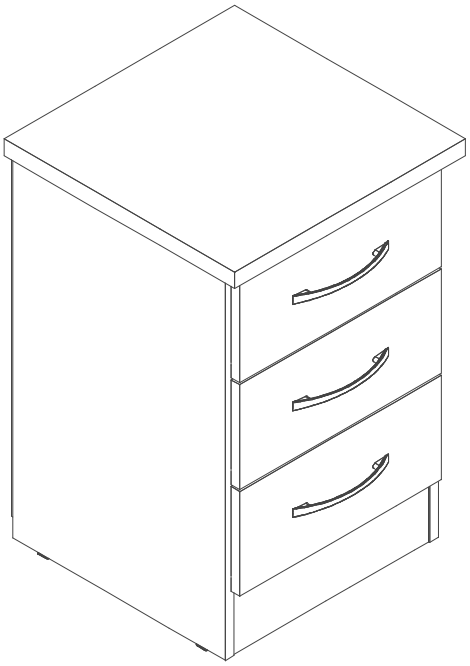

IMPORTANT

FOR DOMESTIC USE ONLY

PLEASE READ BEFORE YOU CONTINUE FURTHER

CARE AND MAINTENANCE

After unpacking this product please keep the original packaging in case it needs to be returned for any reason.

- Please ensure all fittings and parts are present before commencing with assembly.
- Never drag or push products as this could cause damage to the joints making it inferior.
- We strongly recommend that you keep children away from your work area.
- We recommend that you lay a blanket or sheet on the floor to avoid damage to both your floor and the product.
- Assemble this product as close to its final position as possible.
- Do not place this product next to a radiator or in direct sunlight.
- Do not drag or push items across your high gloss furniture as this may cause the surface to scratch
- Wood is a natural product and may expand if subjected to damp and may shrink or crack if subjected to heat. Therefore it is recommended that room temperature is maintained, with no sudden temperature fluctuations.
- Make sure any spillage is wiped off immediately.
- Do not place hot or chilled items directly on to the surface, use a place mat or marking will occur.
- For general cleaning use a soft cotton or micro fibre cloth, and do not use detergents of any kind.
- From time to time it may be necessary to tighten fittings, regular inspections should be carried out.
- Do not place on a wet or damp floor as staining may occur to your floor.

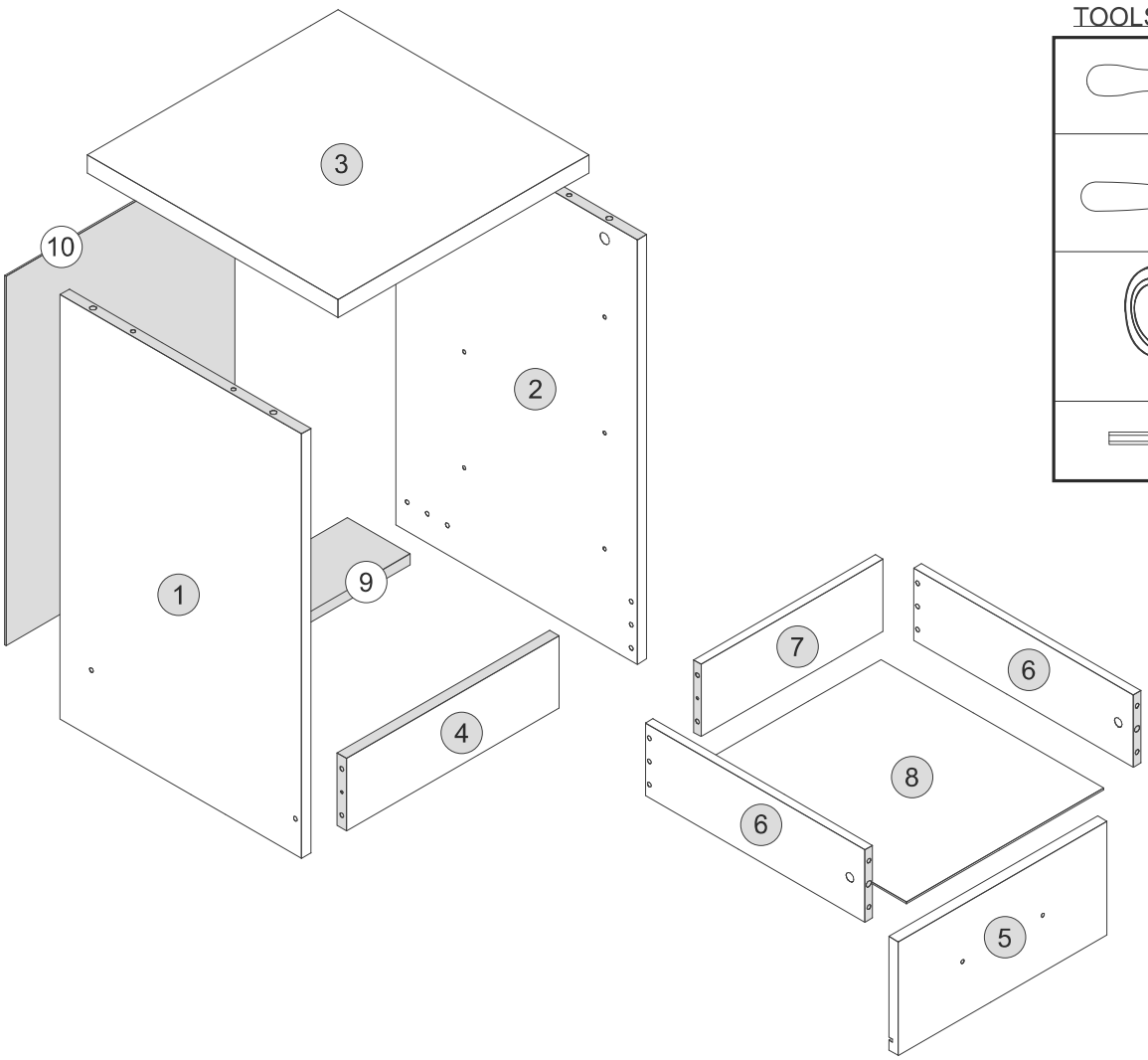

TOOLS REQUIRED

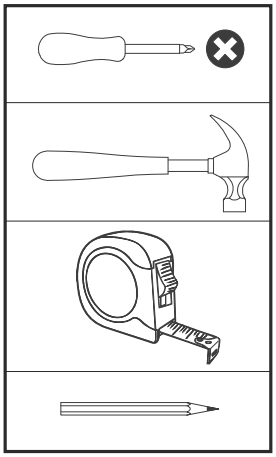

PARTS LIST

Please Note:
The below parts have all been stamped with the part number to help identify them during assembly.

Part Number	Part Description	Quantity	Carton
01	Left Side Panel	1	1/1
02	Right Side Panel	1	1/1
03	Top Panel	1	1/1
04	Front Baseboard	1	1/1
05	Drawer Front	3	1/1
06	Drawer Side	6	1/1
07	Drawer Back Panel	3	1/1
08	Drawer Bottom	3	1/1
09	Back Baseboard	1	1/1
10	Back Panel	1	1/1

FITTINGS LIST

A 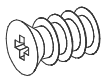 Flat Head Screw 2/+ Ø6,0 x 10mm (12x)	**B** 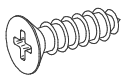 Flat Head Screw 2/+ Ø4,0 x 14mm (18x)	**C** 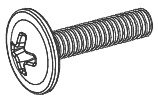 Flan Head Screw Ø4,0 x 20mm (6x)	**D** 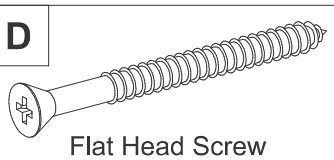 Flat Head Screw 1/+ Ø4,0 x 50mm (10x)
E 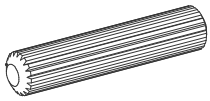 2/+ Dowel Ø6,0 x 30mm (36x)	**F** 2/+ Nail 10x10 Ringed-1,5x23mm (42x)	**G** 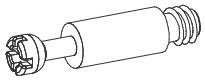 2/+ Cam Bolt (10x)	**H** 1/+ Cam Nut Ø12x8 8mm (6x)
I 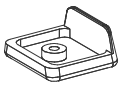 1/+ Plastic Foot L 19x17x8mm Ø2 (4x)	**J** 2/+ Hole Plugs 19mm (4x)	**K** GLUE Glue 10 Gr (2x)	**L** 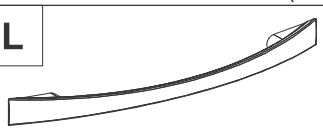 Handle (3x)
M 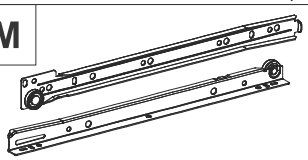 Drawer Runners 350mm (3x)	**N** 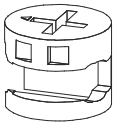 1/+ Cam Nut Ø14,9x11 mm (4x)	**O** Flan Head Screw 1/+ Ø3,5 x 30mm (1x)	**P** Strap 200x20x1MM (1x)
Q 1/+ Washer Ø16x7 (2x)	**R** +/2 Hole Plugs Líneo 19mm (6x)		

TIPS FOR FITTINGS CAM-LOCKS

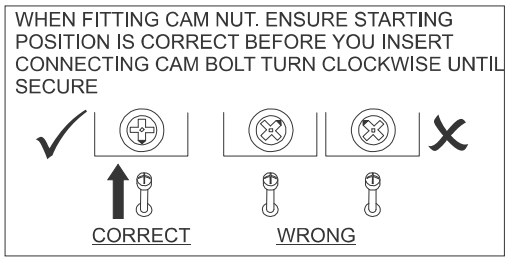

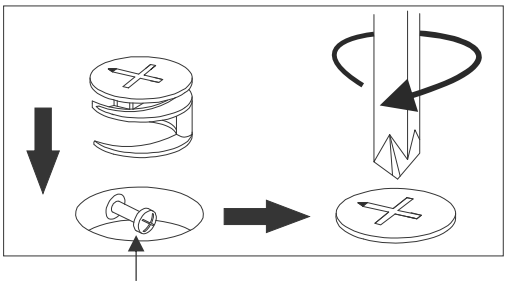

Cam bolt head needs to be in centre

CAMBOLT

Tighten until shoulder in flush with panel. Do not overtighten or undertighten (see example below)

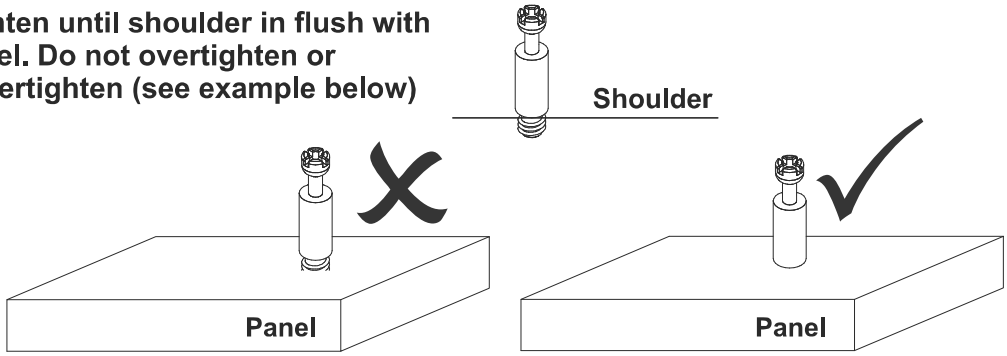

STEP 1

PARTS REQUIRED

1 - LEFT SIDE PANEL	x1

HARDWARE REQUIRED

E	Ø6,0 x 30mm	02
F	10 x 10	02
I		02
K	GLUE	01

TOOLS REQUIRED

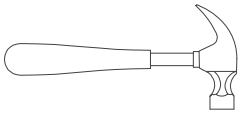

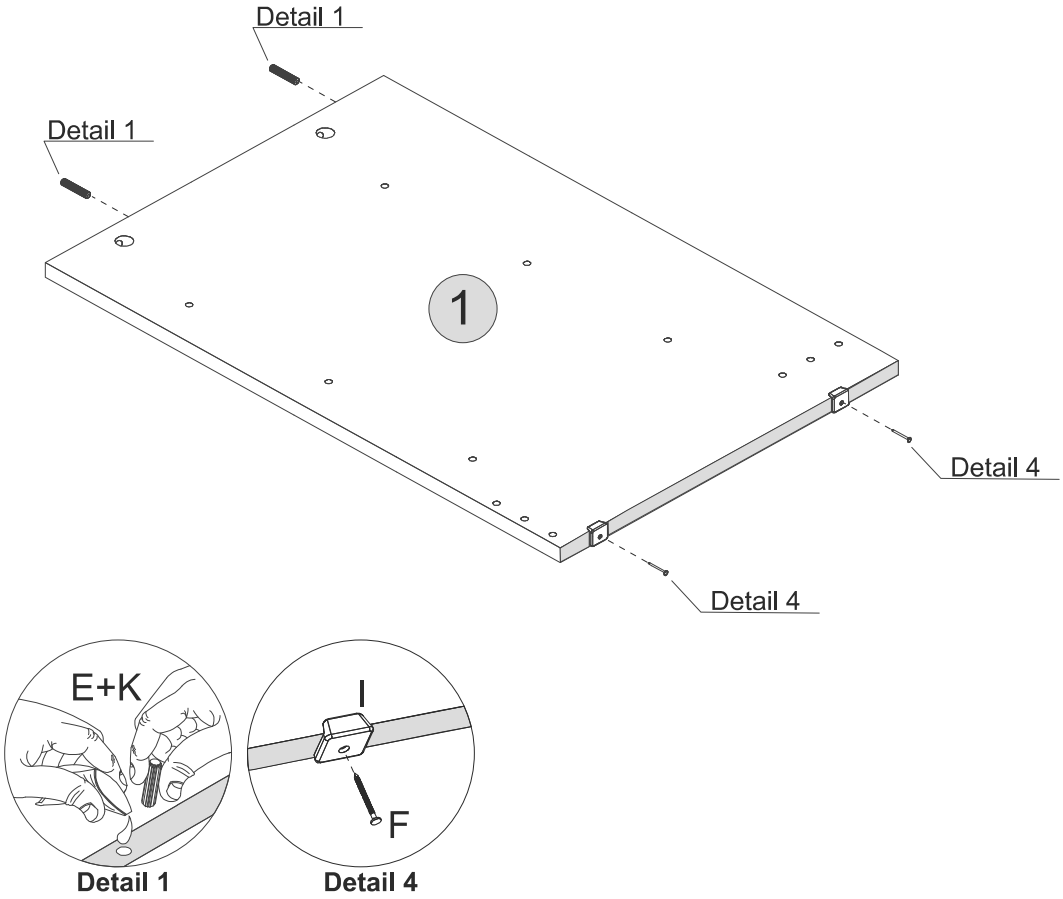

STEP 2

PARTS REQUIRED

2 - RIGHT SIDE PANEL	x1

HARDWARE REQUIRED

E	Ø6,0 x 30mm	02
F	10 x 10	02
I		02
K	GLUE	01

TOOLS REQUIRED

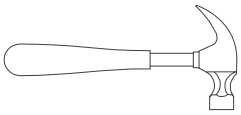

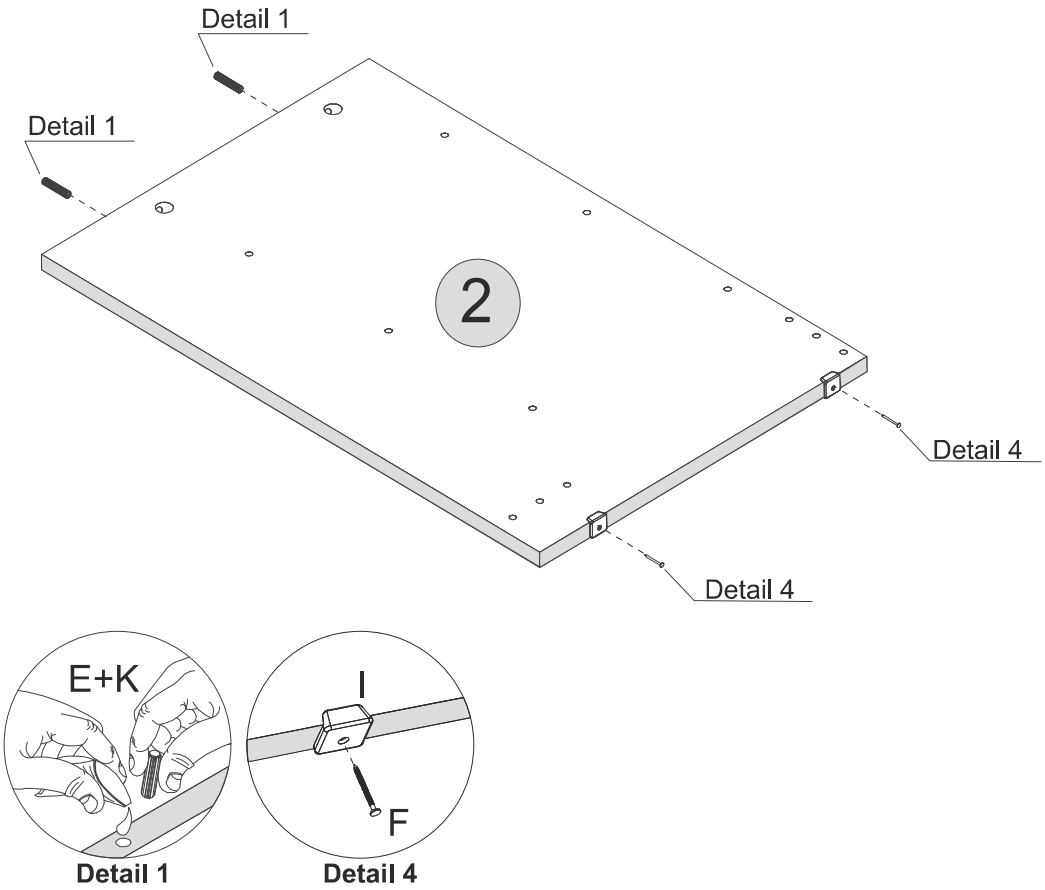

STEP 3

PARTS REQUIRED

2 - RIGHT SIDE PANEL	x1

HARDWARE REQUIRED

A	Ø6,0 x 10mm	06
B	Ø4,0 x 14mm	03
M	RIGHT	03

TOOLS REQUIRED

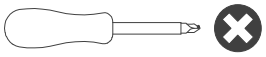

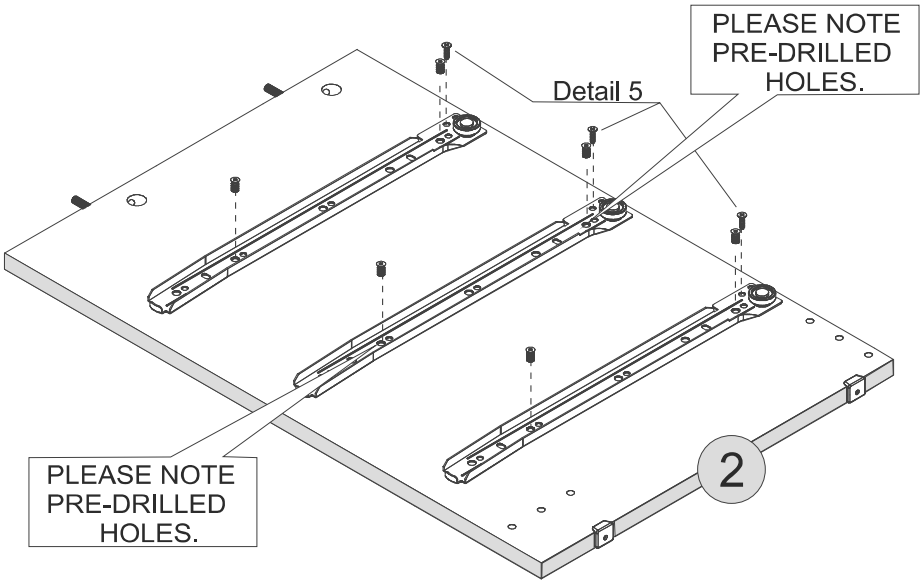

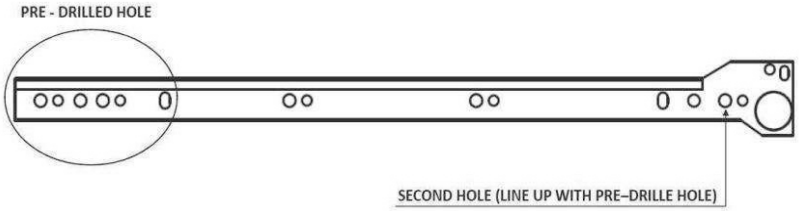

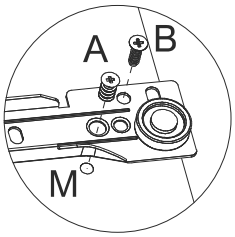

Detail 5

STEP 4

PARTS REQUIRED

1 - LEFT SIDE PANEL	x1

HARDWARE REQUIRED

A	Ø6,0 x 10mm	06
B	Ø4,0 x 14mm	03
M	LEFT	03

TOOLS REQUIRED

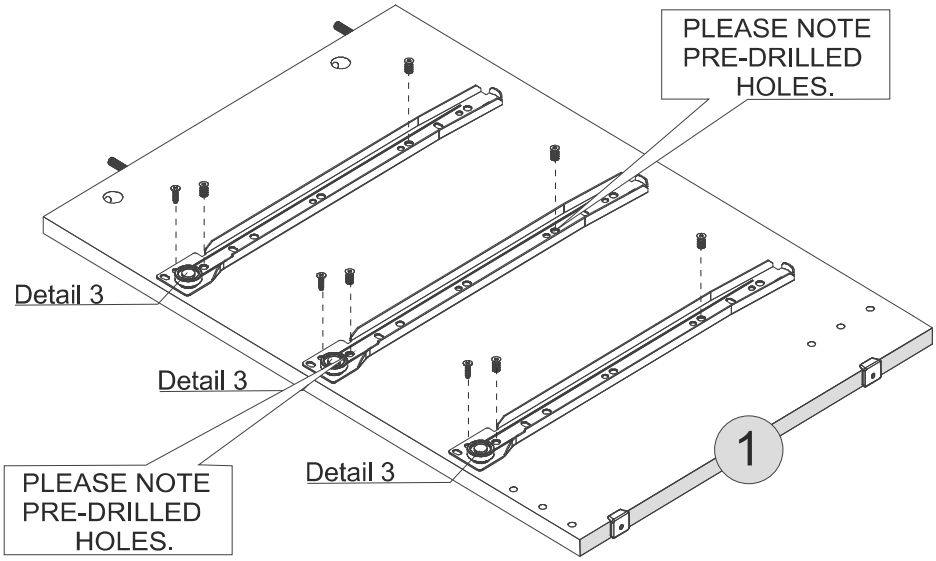

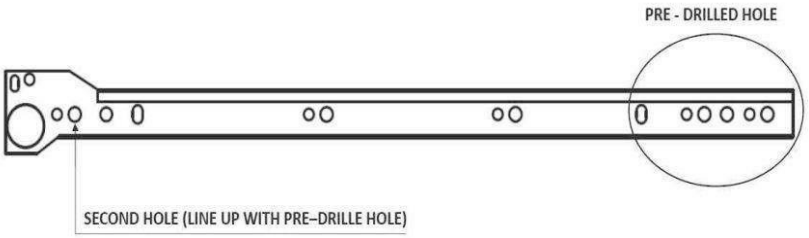

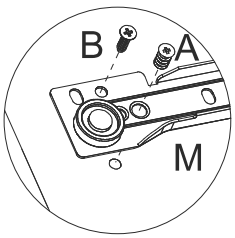

Detail 3

STEP 5

PARTS REQUIRED

9 -	BACK BASEBOARD	x1
4 -	FRONT BASEBOARD	x1

HARDWARE REQUIRED

E	Ø6,0 x 30mm	08
K	GLUE	01

TOOLS REQUIRED

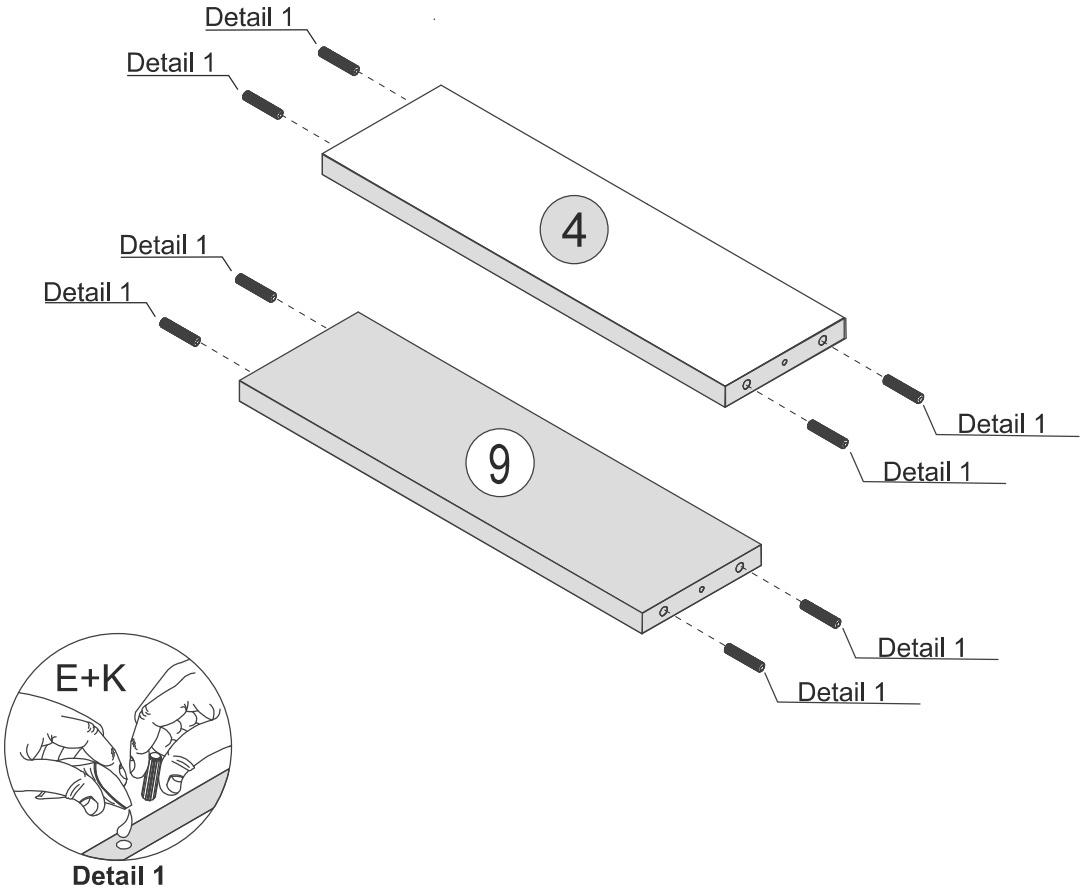

STEP 6

PARTS REQUIRED

2 -	RIGHT SIDE PANEL	x1
9 -	BACK BASEBOARD	x1
4 -	FRONT BASEBOARD	x1

HARDWARE REQUIRED

D	Ø4 x 50mm	02
K	GLUE	01

TOOLS REQUIRED

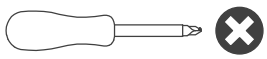

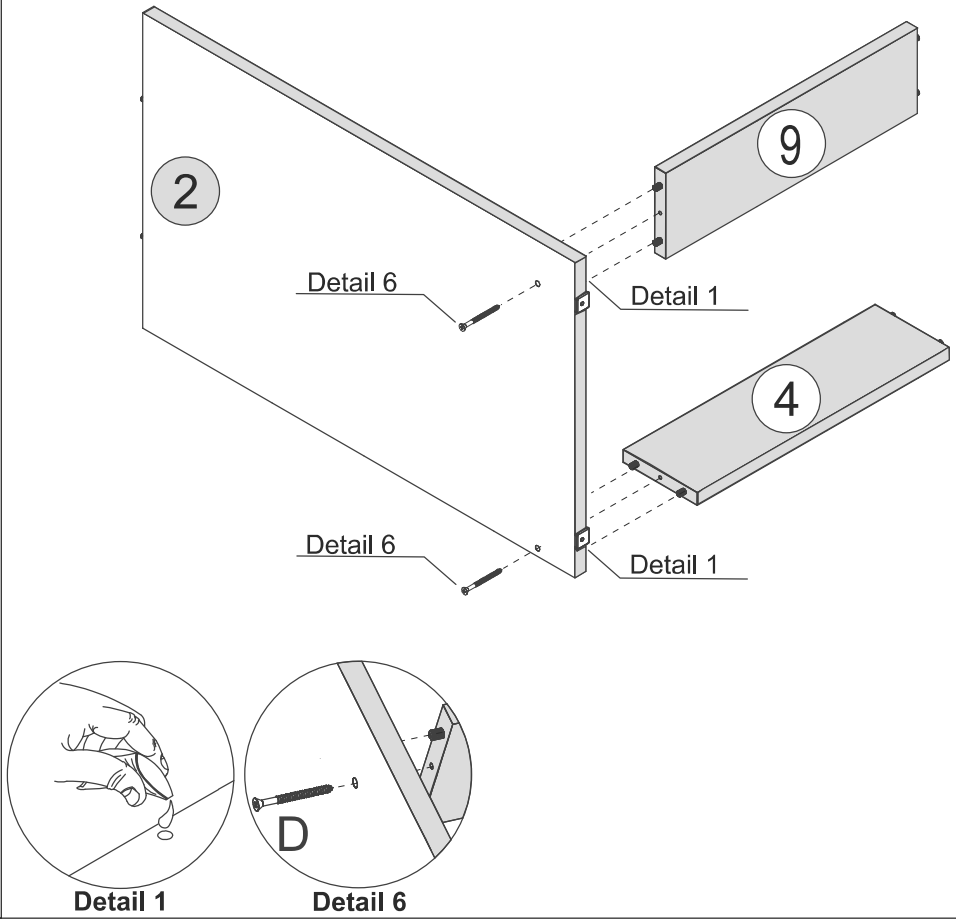

STEP 7

PARTS REQUIRED

1 - LEFT SIDE PANEL	x1

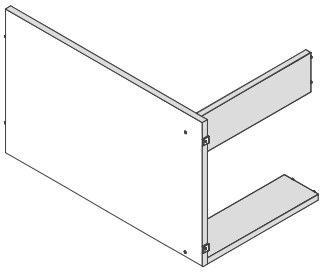

HARDWARE REQUIRED

D	Ø4 x 50mm	02
K	GLUE	01

TOOLS REQUIRED

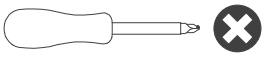

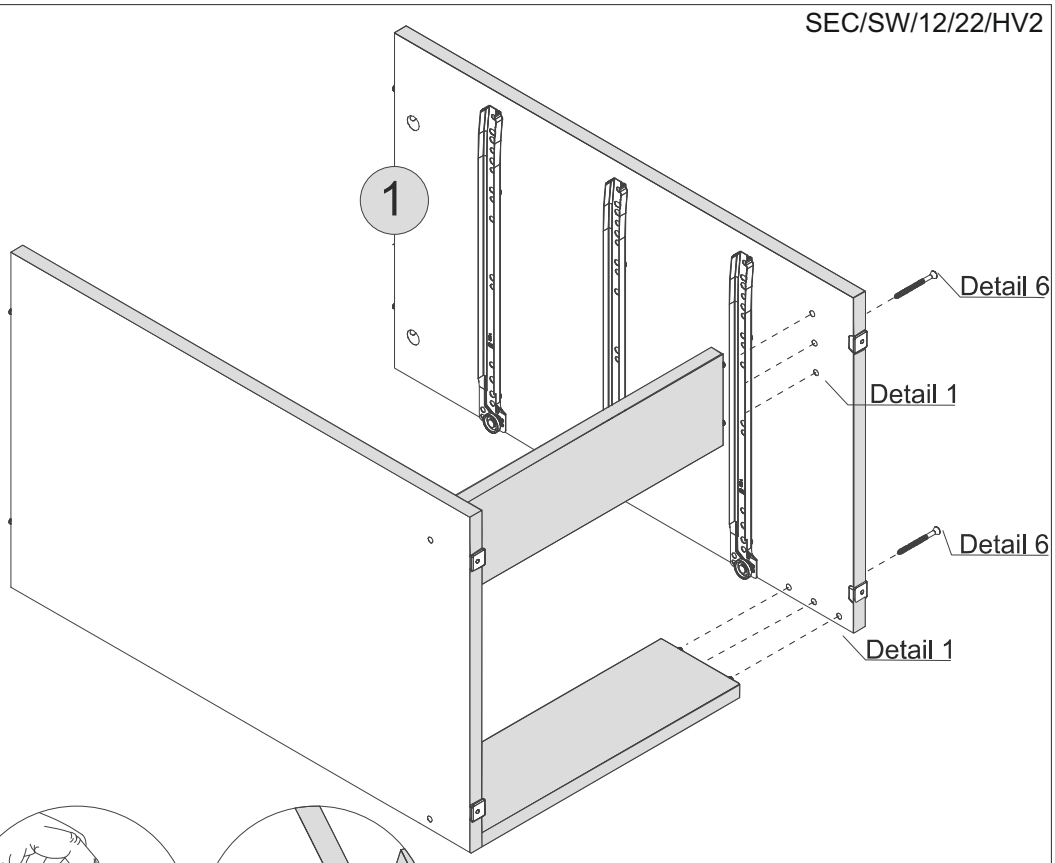

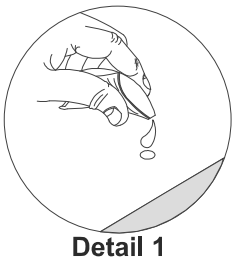

Detail 1

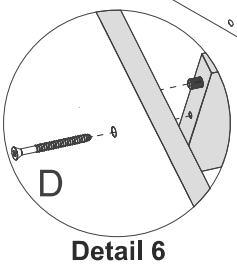

Detail 6

STEP 8

PARTS REQUIRED

3 - TOP PANEL	x1

HARDWARE REQUIRED

G		04

TOOLS REQUIRED

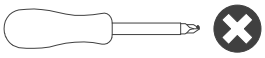

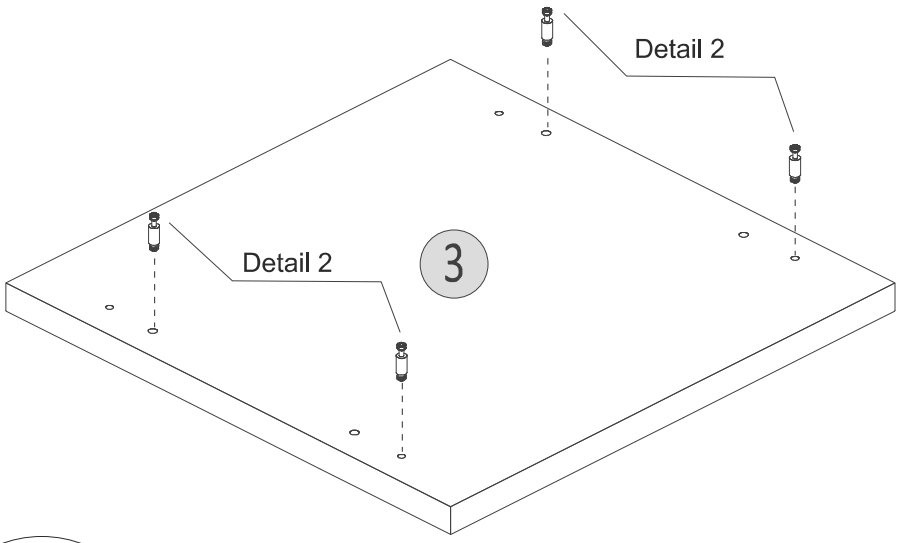

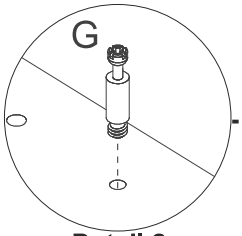

Detail 2

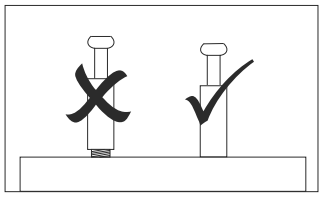

STEP 9

PARTS REQUIRED

3 - TOP PANEL	x1

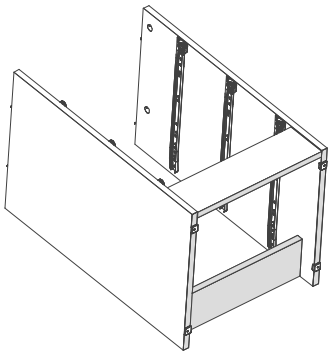

HARDWARE REQUIRED

K	GLUE	01
N		04

TOOLS REQUIRED

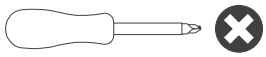

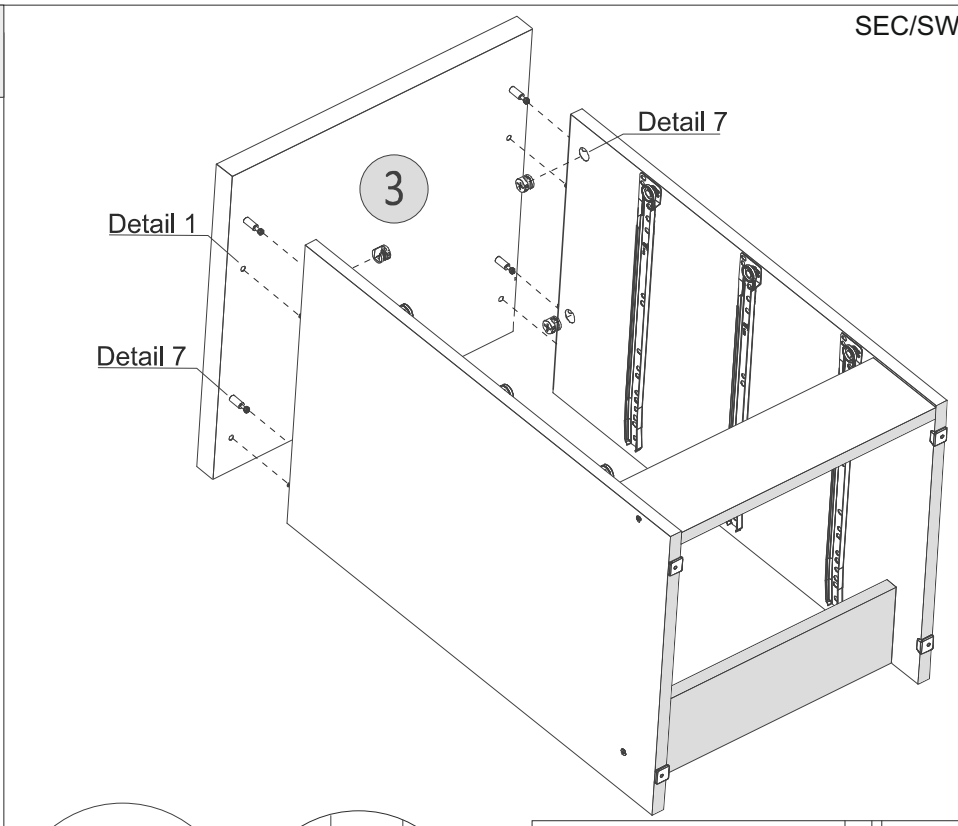

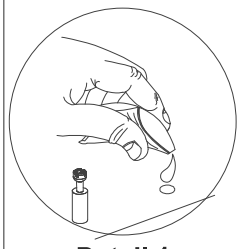

Detail 1

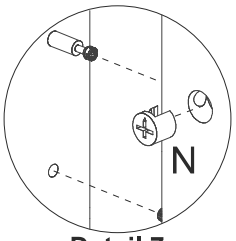

Detail 7

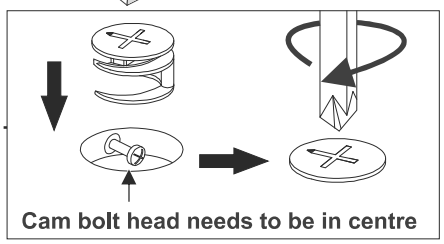

Cam bolt head needs to be in centre

STEP 10

PARTS REQUIRED

10 - BACK PANEL	x1

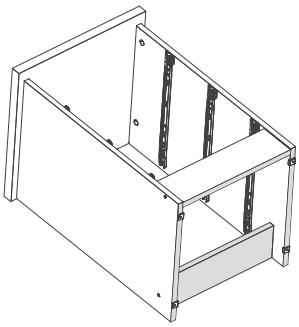

HARDWARE REQUIRED

F		14

TOOLS REQUIRED

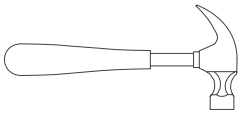

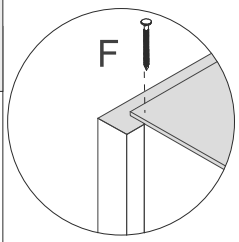

Detail 8

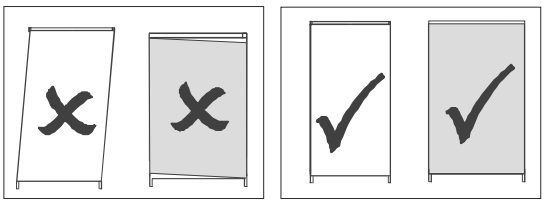

Detail 8

* For your future reference
Order Number should be here

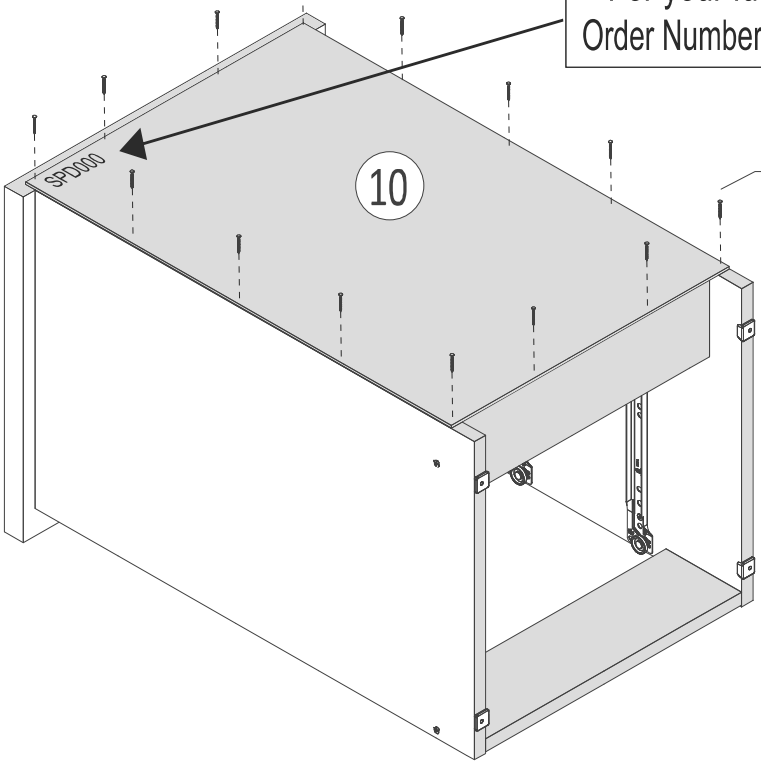

Detail 8

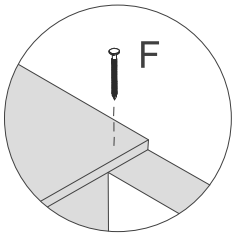

Detail 8

STEP 11

PARTS REQUIRED

6 - DRAWER SIDE	x6
7 - DRAWER BACK PANEL	x3

HARDWARE REQUIRED

E	Ø6 x 30mm	24
K	GLUE	01

TOOLS REQUIRED

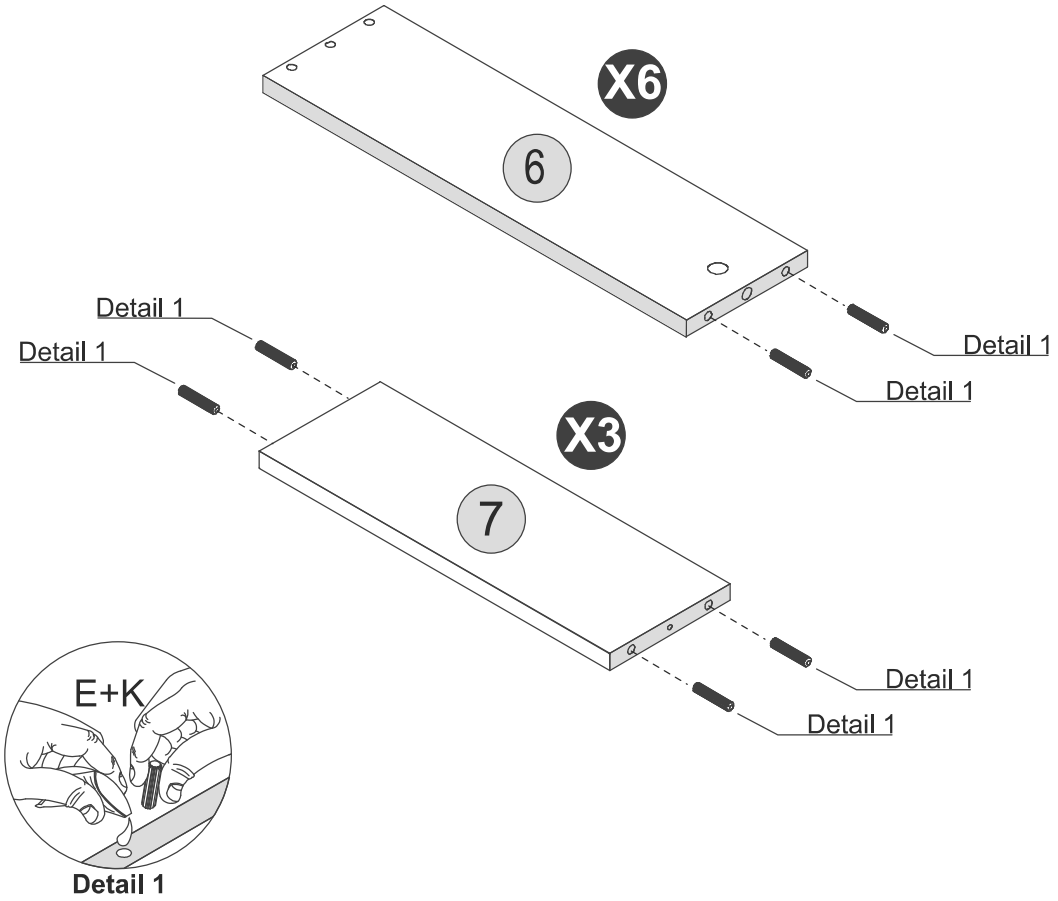

STEP 12

PARTS REQUIRED

5 - DRAWER FRONT	x3

HARDWARE REQUIRED

G		06

TOOLS REQUIRED

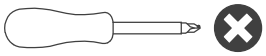

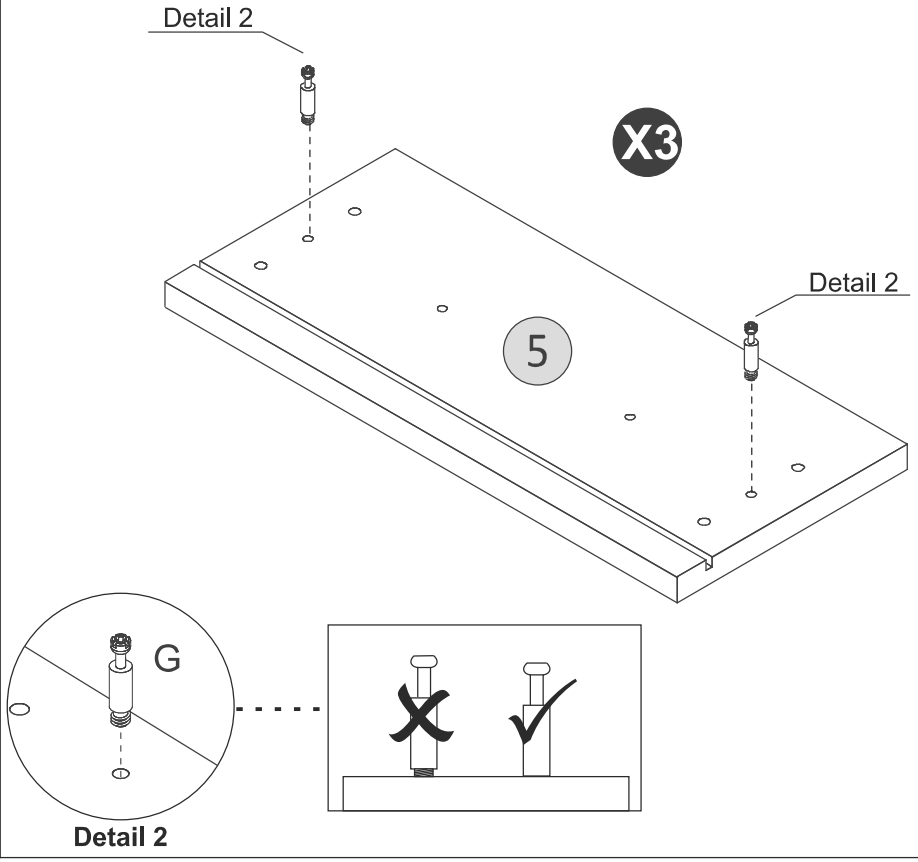

STEP 13

PARTS REQUIRED

6 - DRAWER SIDE	x6
7 - DRAWER BACK PANEL	x3

HARDWARE REQUIRED

D	Ø4 x 50mm	06

TOOLS REQUIRED

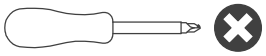

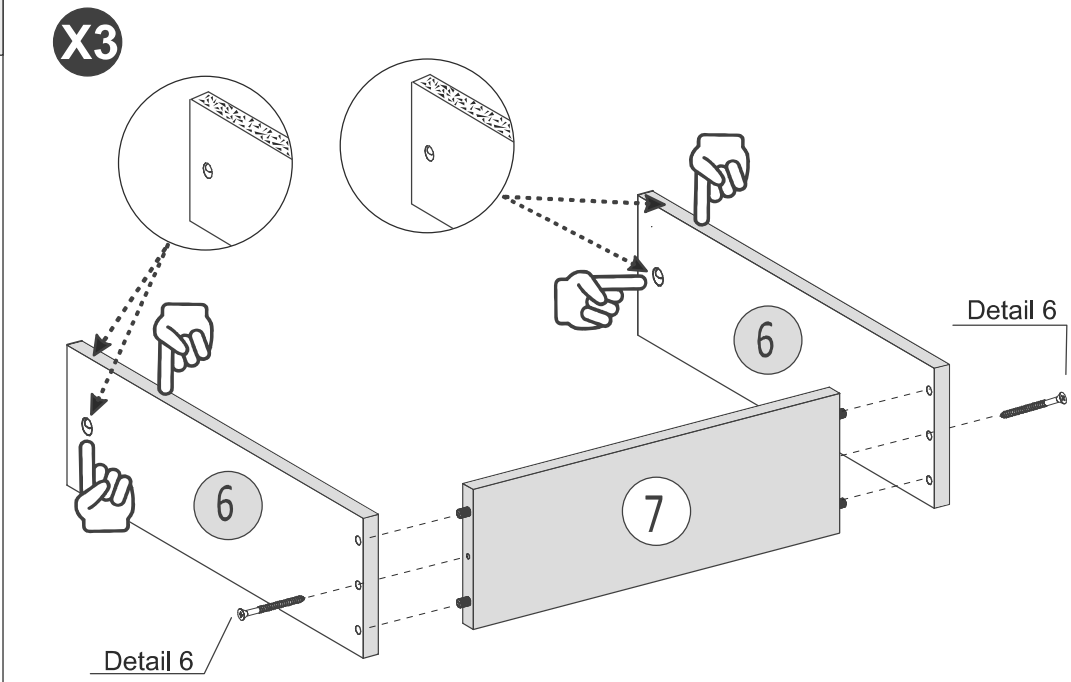

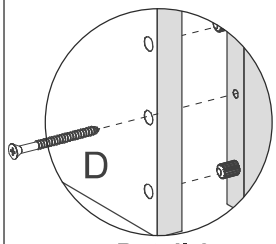

Detail 6

STEP 14

PARTS REQUIRED

5 - DRAWER FRONT	x3

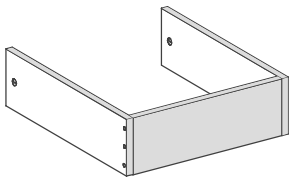

HARDWARE REQUIRED

H		06
K	GLUE	01

TOOLS REQUIRED

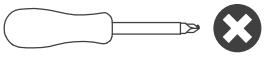

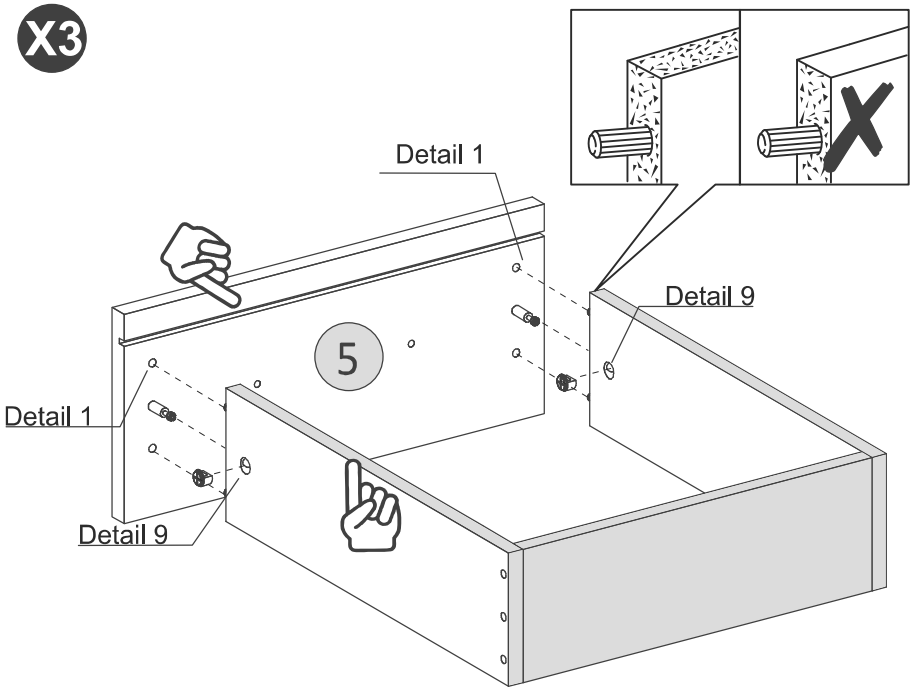

Detail 1

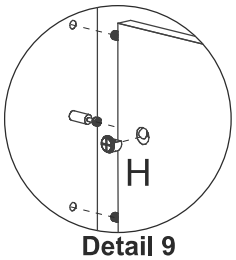

Detail 9

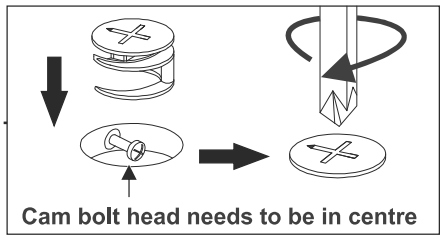

Cam bolt head needs to be in centre

STEP 15

PARTS REQUIRED

8 - DRAWER BOTTOM	x3

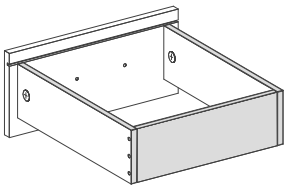

HARDWARE REQUIRED

F	10 x 10	12

TOOLS REQUIRED

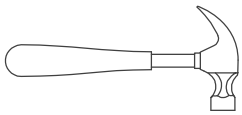

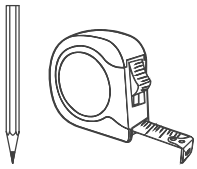

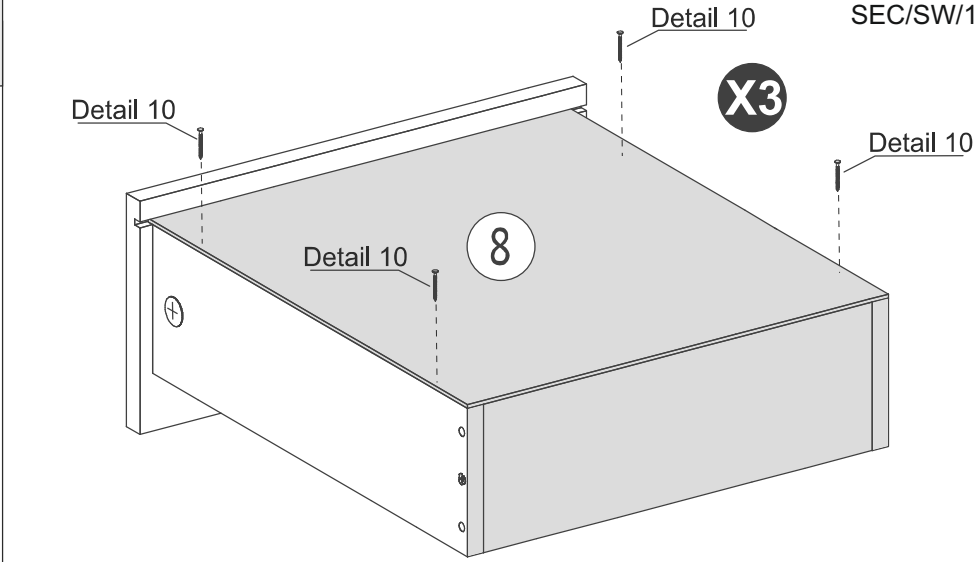

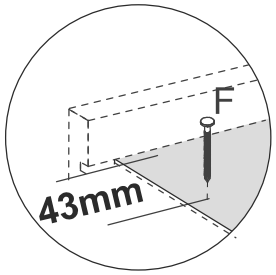

Detail 10

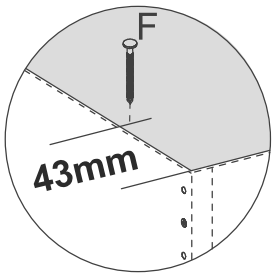

Detail 10

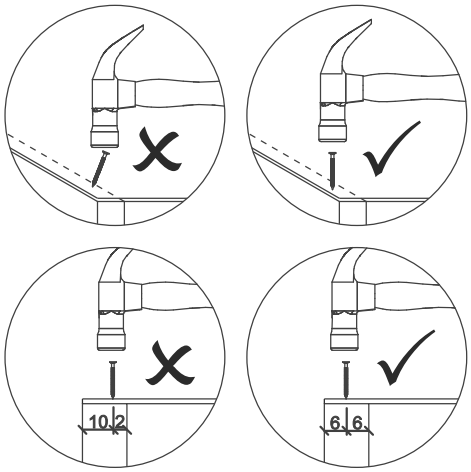

STEP 16

PARTS REQUIRED

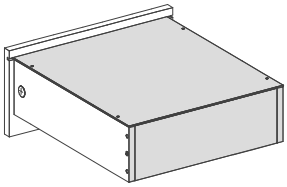

HARDWARE REQUIRED

F	10 x 10	12

TOOLS REQUIRED

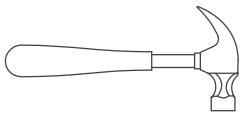

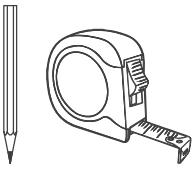

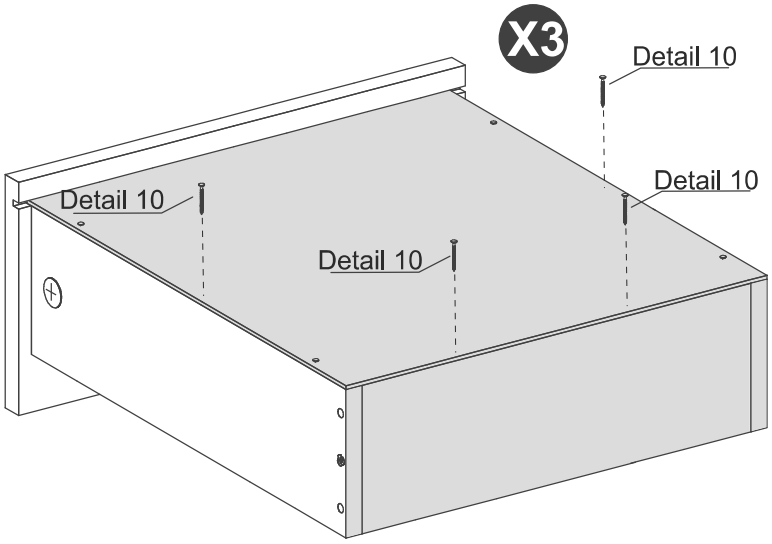

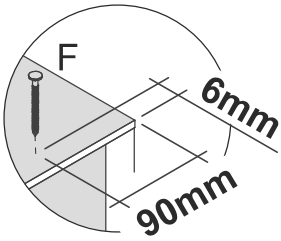

Detail 10

STEP 17

PARTS REQUIRED

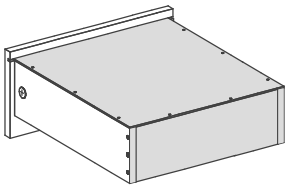

HARDWARE REQUIRED

B	Ø4,0 x 14mm	12
M	LEFT	03
M	RIGHT	03

TOOLS REQUIRED

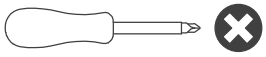

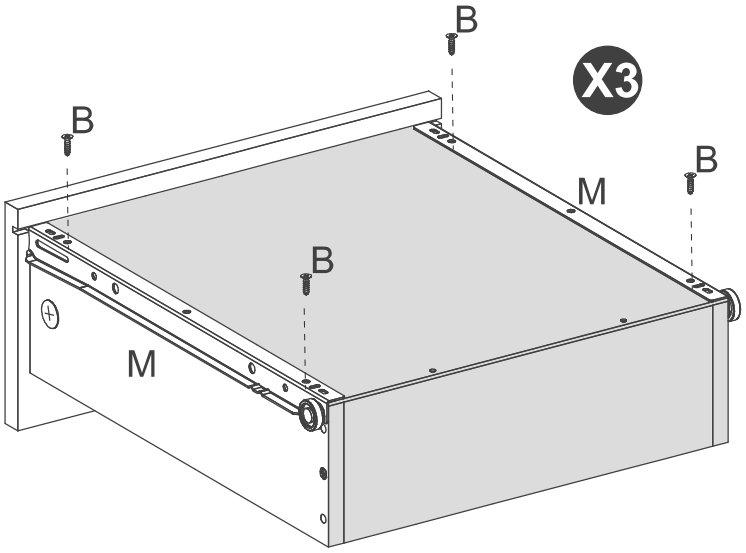

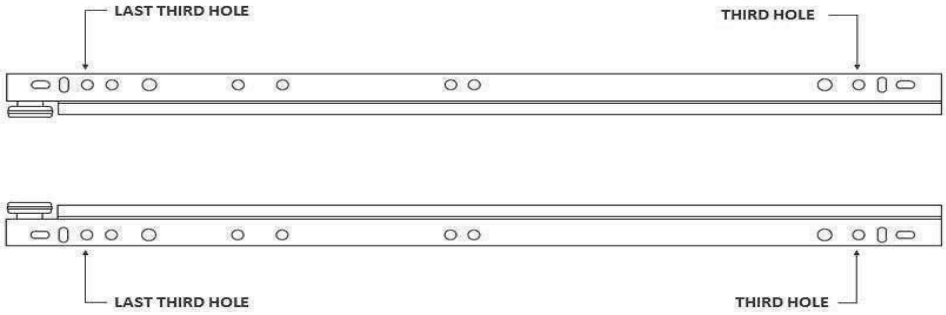

STEP 18

PARTS REQUIRED

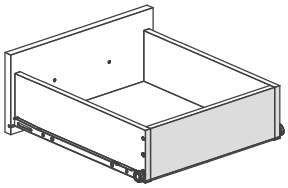

HARDWARE REQUIRED

C	Ø4,0 x 22mm	06
L		03

TOOLS REQUIRED

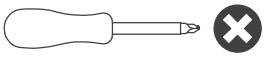

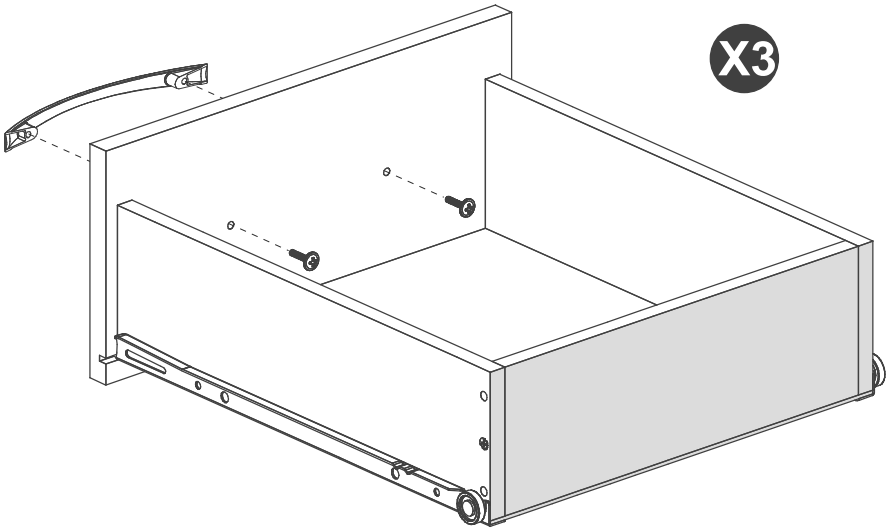

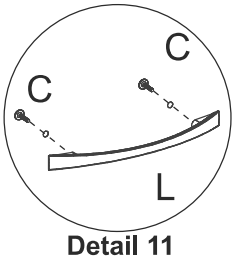

Detail 11

STEP 19

PARTS REQUIRED

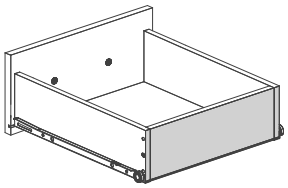

HARDWARE REQUIRED

R	⬭	06

TOOLS REQUIRED

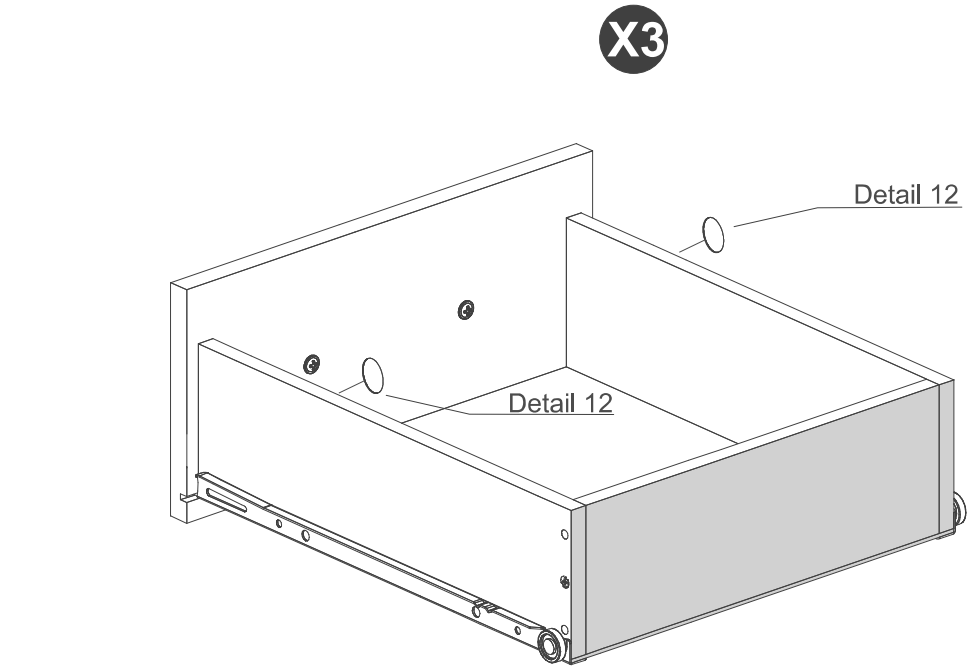

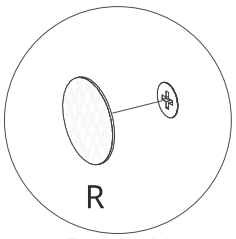

Detail 12

STEP 20

PARTS REQUIRED

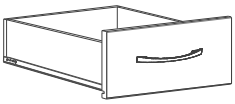

HARDWARE REQUIRED

J	⬭	04

TOOLS REQUIRED

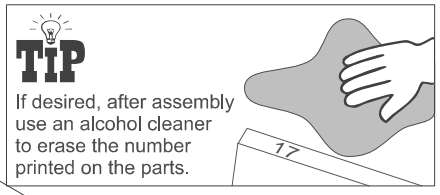

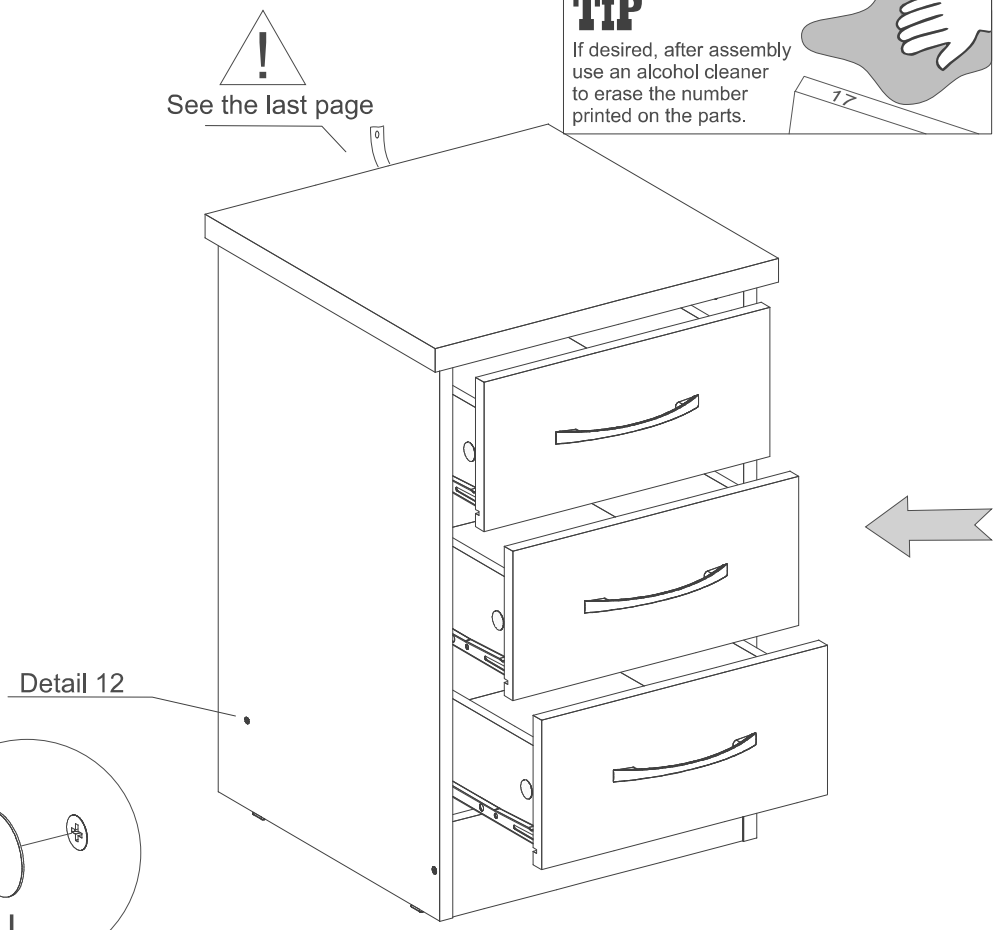

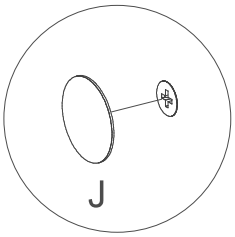

Detail 12

WARNING

Serious or fatal injuries can occur from furniture tipping over. To prevent the furniture from tipping over we recommend that it is permanently fixed to the wall.
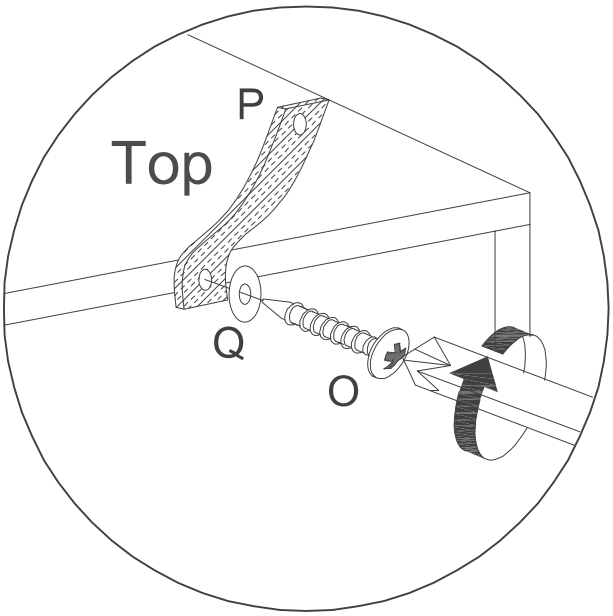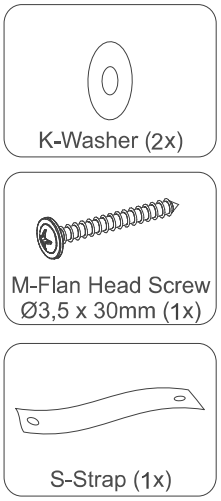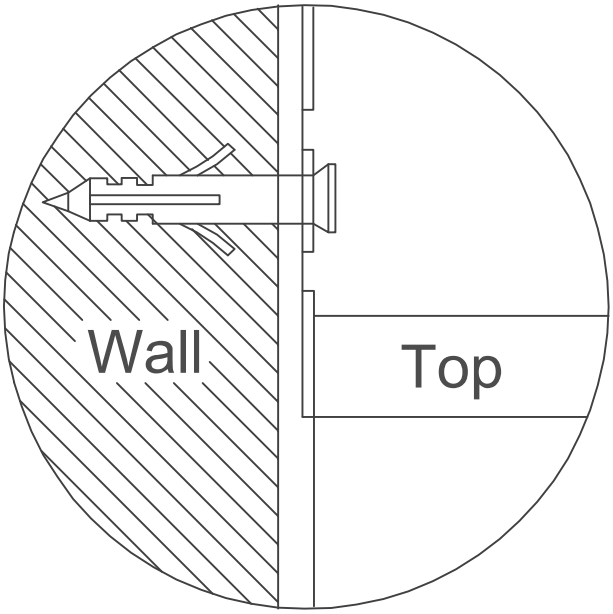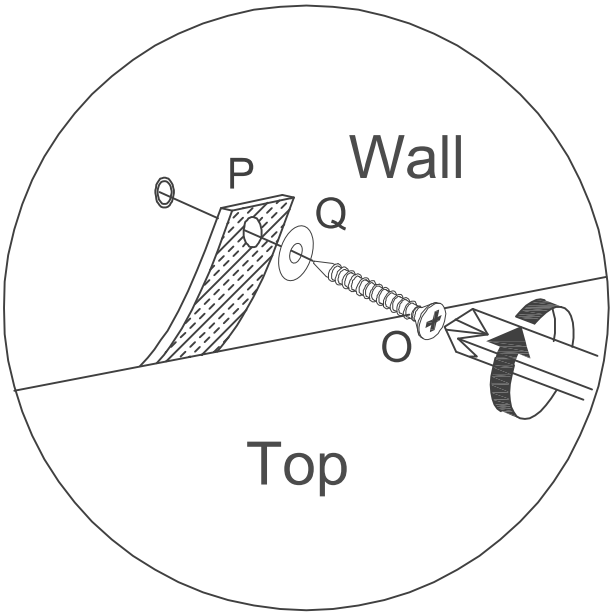
Wall fixings are not supplied with this product as different wall materials require different types of fixing devices.
Please make sure you use fixings suitable for the walls in your home.