NEVADA 2 DOOR 1 DRAWER WARDROBE ASSEMBLY INSTRUCTIONS

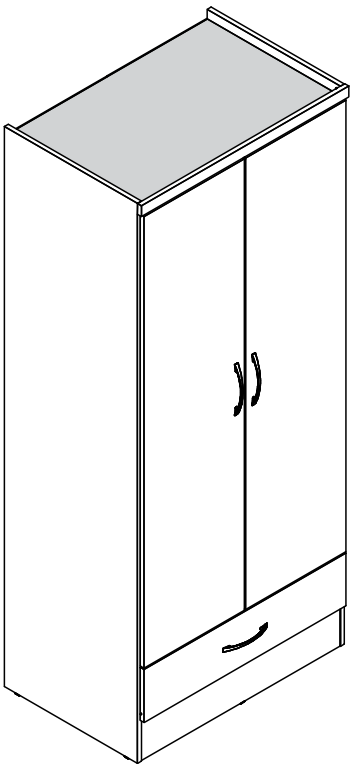

IMPORTANT

FOR DOMESTIC USE ONLY

PLEASE READ BEFORE YOU CONTINUE FURTHER

CARE AND MAINTENANCE

After unpacking this product please keep the original packaging in case it needs to be returned for any reason.

- Please ensure all fittings and parts are present before commencing with assembly.
- Never drag or push products as this could cause damage to the joints making it inferior.
- We strongly recommend that you keep children away from your work area.
- We recommend that you lay a blanket or sheet on the floor to avoid damage to both your floor and the product.
- Assemble this product as close to its final position as possible.
- Do not place this product next to a radiator or in direct sunlight.
- Do not drag or push items across your high gloss furniture as this may cause the surface to scratch
- Wood is a natural product and may expand if subjected to damp and may shrink or crack if subjected to heat. Therefore it is recommended that room temperature is maintained, with no sudden temperature fluctuations.
- Make sure any spillage is wiped off immediately.
- Do not place hot or chilled items directly on to the surface, use a place mat or marking will occur.
- For general cleaning use a soft cotton or micro fibre cloth, and do not use detergents of any kind.
- From time to time it may be necessary to tighten fittings, regular inspections should be carried out.
- Do not place on a wet or damp floor as staining may occur to your floor.

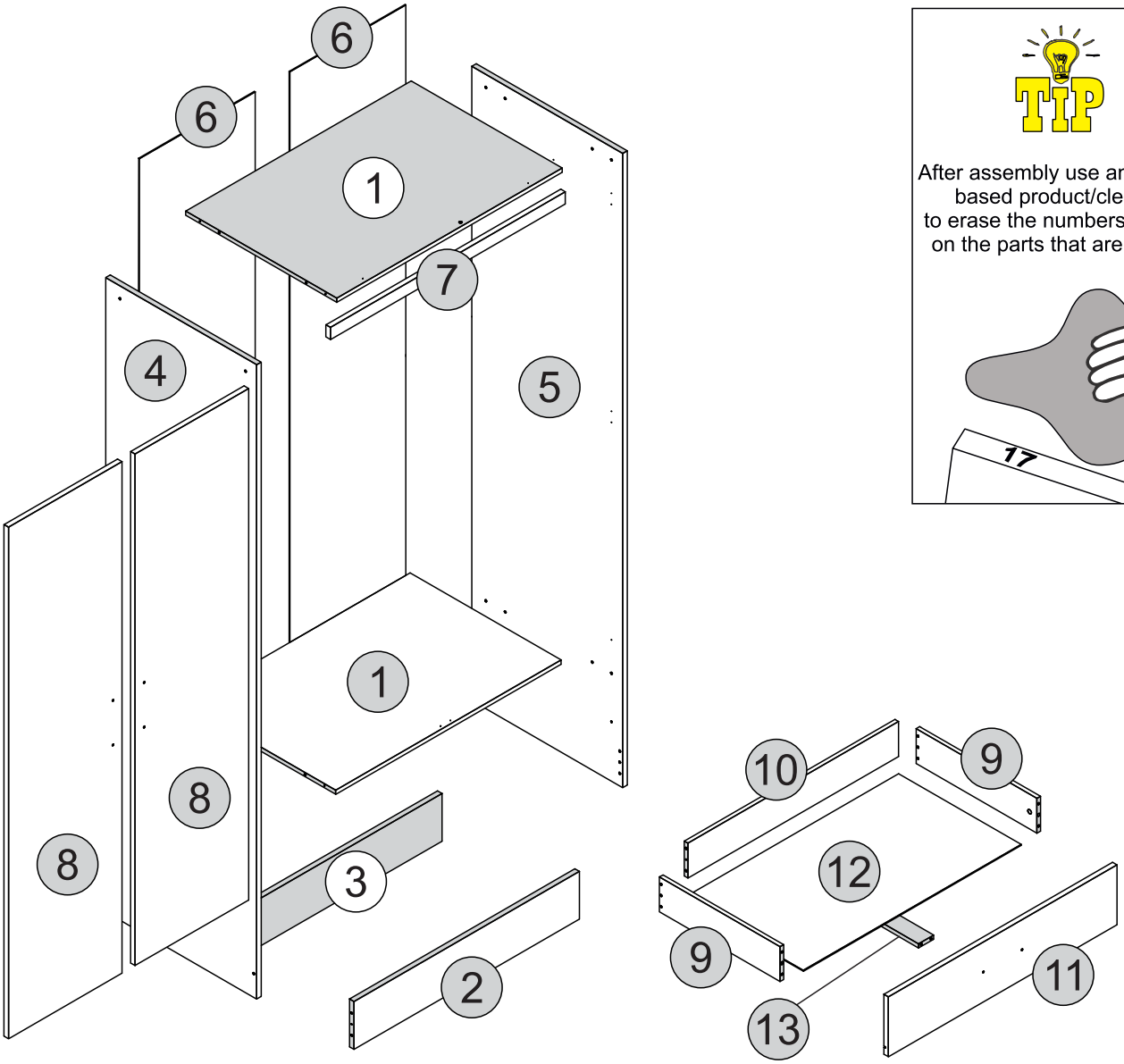

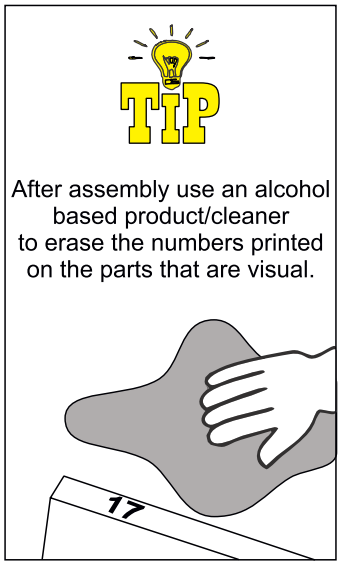

PARTS LIST

Please Note:
The below parts have all been stamped with the part number to help identify them during assembly.

Part Number	Part Description	Quantity	Carton
01	Base-Top Panel	2	1/2
02	Front Baseboard	1	2/2
03	Back Baseboard	1	2/2
04	Left Side Panel	1	1/2
05	Right Side Panel	1	1/2
06	Back Panel	2	1/2
07	Frame	1	2/2
08	Door	2	2/2
09	Drawer Side	2	1/2
10	Drawer Back Panel	1	2/2
11	Drawer Front	1	2/2
12	Drawer Botom	1	1/2
13	Drawer Botom Support Bar	1	1/2

TOOLS REQUIRED

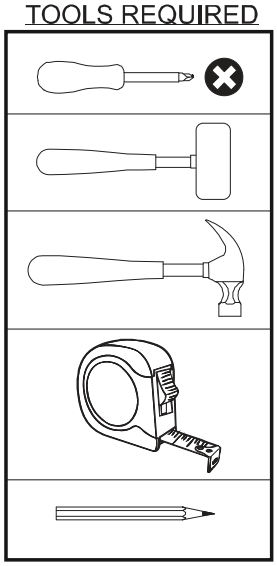

FITTINGS LIST

A Flat Head Screw Ø6,0 x 10mm (4x) 1/+	**B** Flan Head Screw Ø4,0 x 14mm (6x) 1/+	**C** Flat Head Screw Ø4,0 x 14mm (34x) 2/+	**D** Flan Head Screw Ø4,0 x 20mm (6x) 1/+
E Flat Head Screw Ø3,5 x 40mm (2x) 1/+	**F** Flat Head Screw Ø4,0 x 50mm (14x) 2/+	**G** Dowel Ø6,0 x 30mm (26x) 2/+	
H Nail 10 x 10 (58x) 2/+	**I** Flan Head Screw Ø3,5 x 30mm (2x) 1/+	**J** 'L' Metallic Support (4x) 1/+	**K** Washer (4x) 1/+
L Plastic Foot (6x) 1/+	**M** Hanging Rail Support (2x)	**N** Hanging Rail (1x)	
O Hinge (6x)	**P** Hinge Plate (6x)	**Q** Drawer Runners (1x)	
R Back Panel Strip (1x)	**S** Strap (2x)	**T** Handle (3x)	
U Hole Plugs (12x) 2/+	**V** Glue (1x)	**W** Cam Nut (2x) 1/+	**X** Cam Bolt (2x) 1/+
Y Flat Head Screw Ø4,0 x 12mm (12x) 2/+	**Z** Door Support (2x)	**A1** Hole Plugs (2x) 2/+	

TIPS FOR FITTINGS CAM-LOCKS

WHEN FITTING CAM NUT. ENSURE STARTING POSITION IS CORRECT BEFORE YOU INSERT CONNECTING CAM BOLT TURN CLOCKWISE UNTIL SECURE

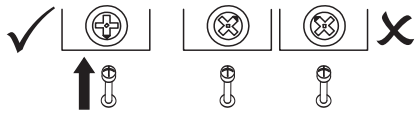

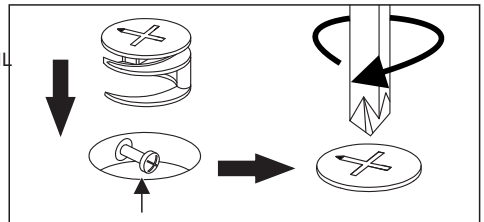

Cam bolt head needs to be in centre

CAMBOLT

Tighten until shoulder in flush with panel. Do not overtighten or undertighten (see example beside)

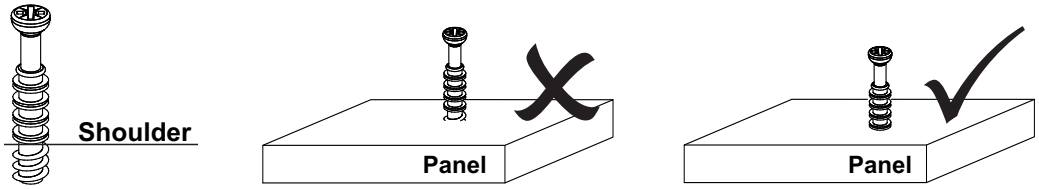

STEP 1

PARTS REQUIRED

4 - LEFT SIDE PANEL	x1

HARDWARE REQUIRED

A	Ø6,0 x 10mm	02
H	10 x 10	02
L		02
Q	LEFT	01

TOOLS REQUIRED

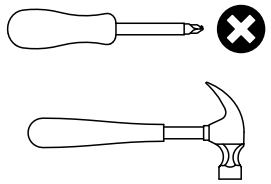

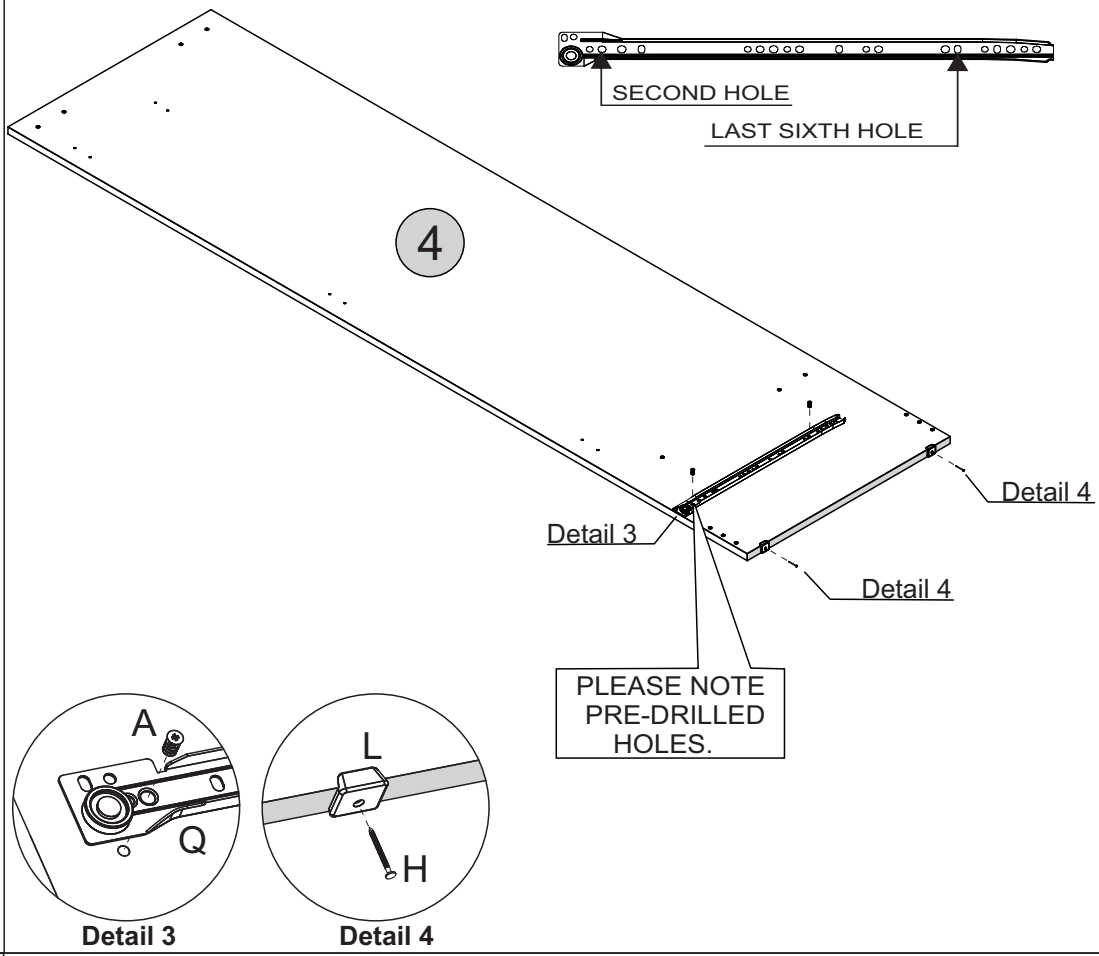

STEP 2

PARTS REQUIRED

4 - RIGHT SIDE PANEL	x1

HARDWARE REQUIRED

A	Ø6,0 x 10mm	02
H	10 x 10	02
L		02
Q	RIGHT	01

TOOLS REQUIRED

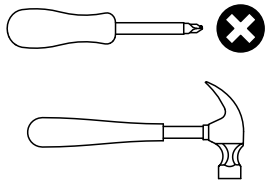

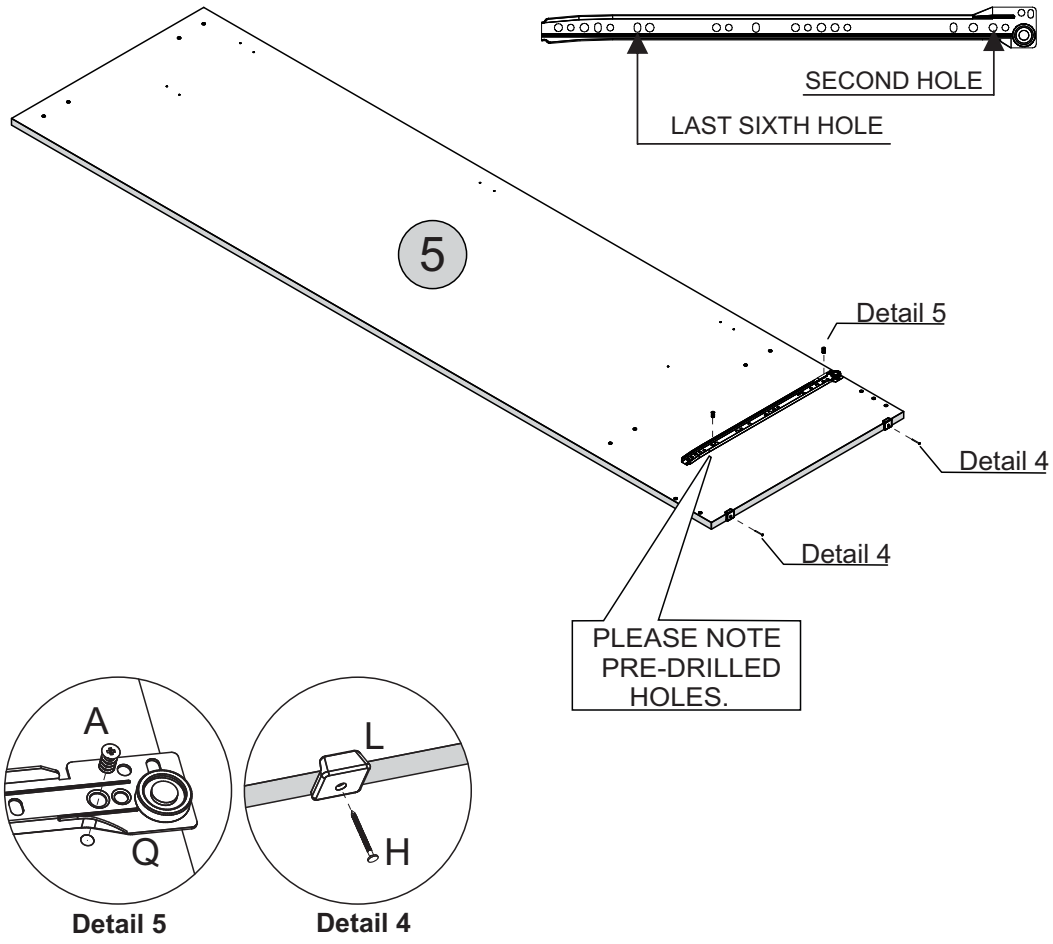

STEP 3

PARTS REQUIRED

4 - LEFT SIDE PANEL	x1

HARDWARE REQUIRED

C	Ø4,0 x 14mm	08
M		01
P		03

TOOLS REQUIRED

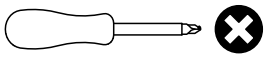

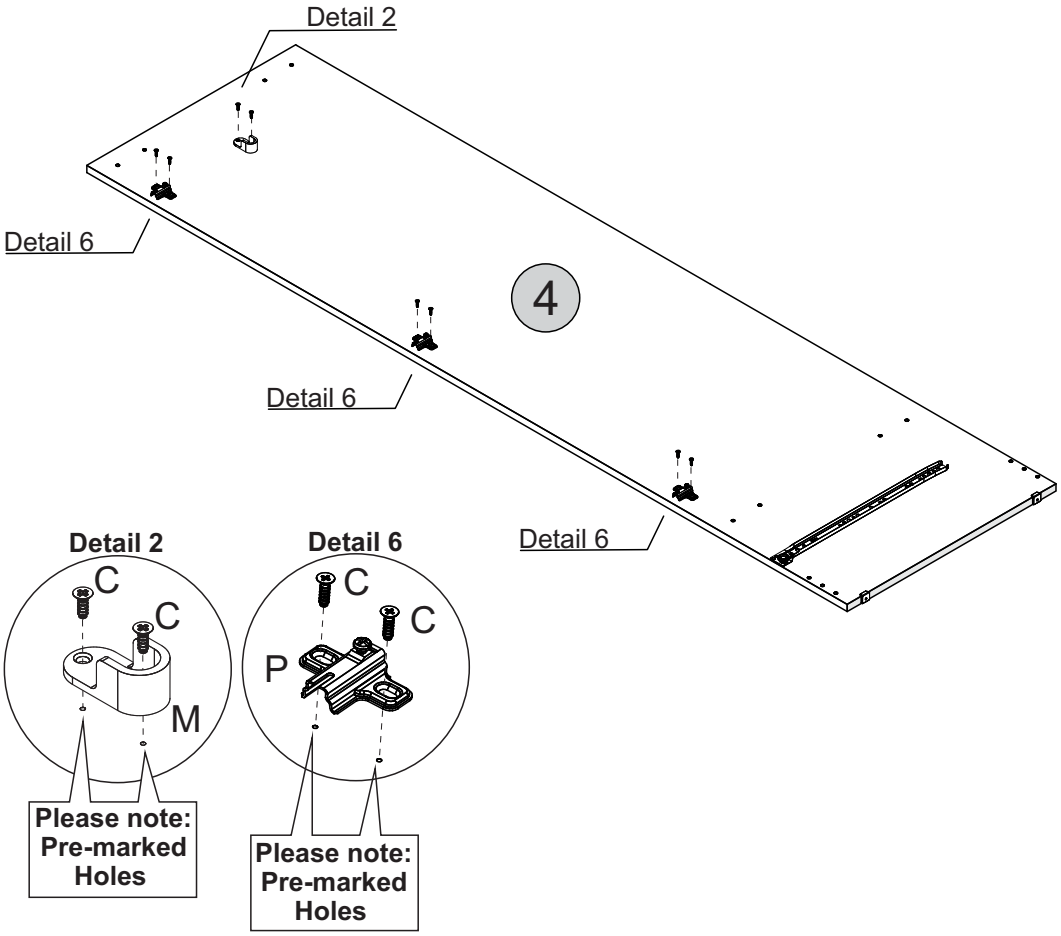

STEP 4

PARTS REQUIRED

4 - RIGHT SIDE PANEL	x1

HARDWARE REQUIRED

C	Ø4,0 x 14mm	08
M		01
P		03

TOOLS REQUIRED

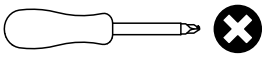

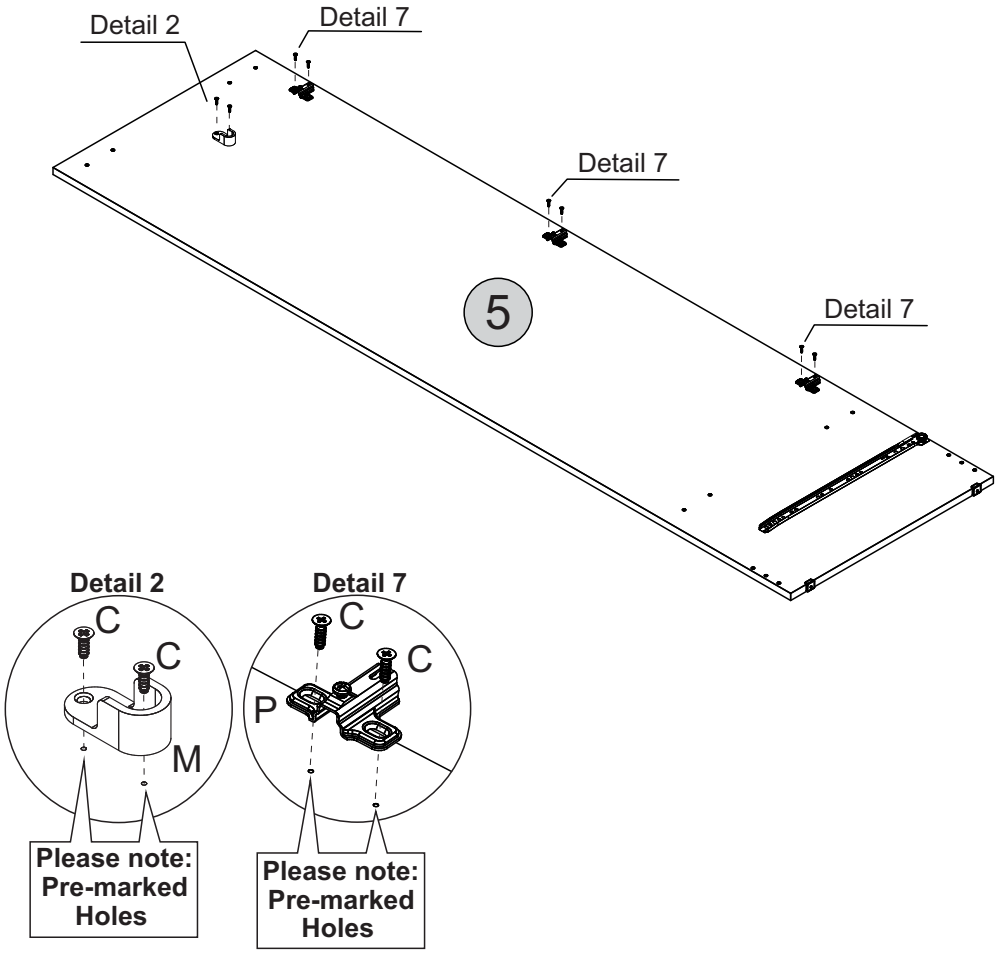

STEP 5

PARTS REQUIRED

1A - TOP PANEL	x1
1B - BASE PANEL	x1

HARDWARE REQUIRED

G	Ø6,0 x 30mm	08
J		02
V	Glue	01
Y	Ø4,0 x 12mm	06
Z		02

TOOLS REQUIRED

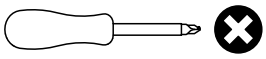

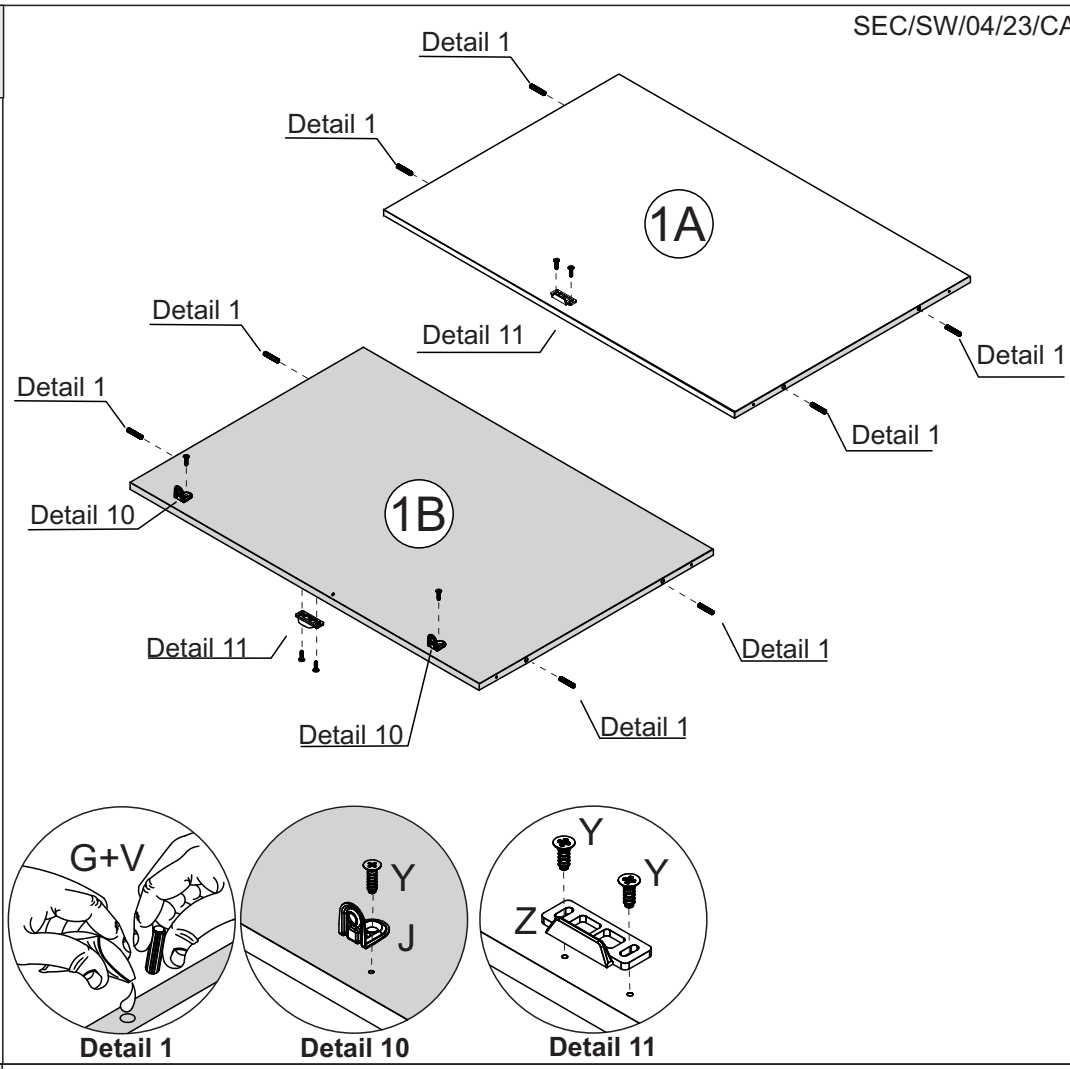

STEP 6

PARTS REQUIRED

2 - FRONT BASEBOARD	x1
3 - BACK BASEBOARD	x1

HARDWARE REQUIRED

G	Ø6,0 x 30mm	08
H	10 x 10	02
L		02
V	Glue	01

TOOLS REQUIRED

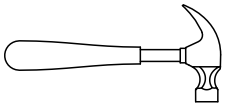

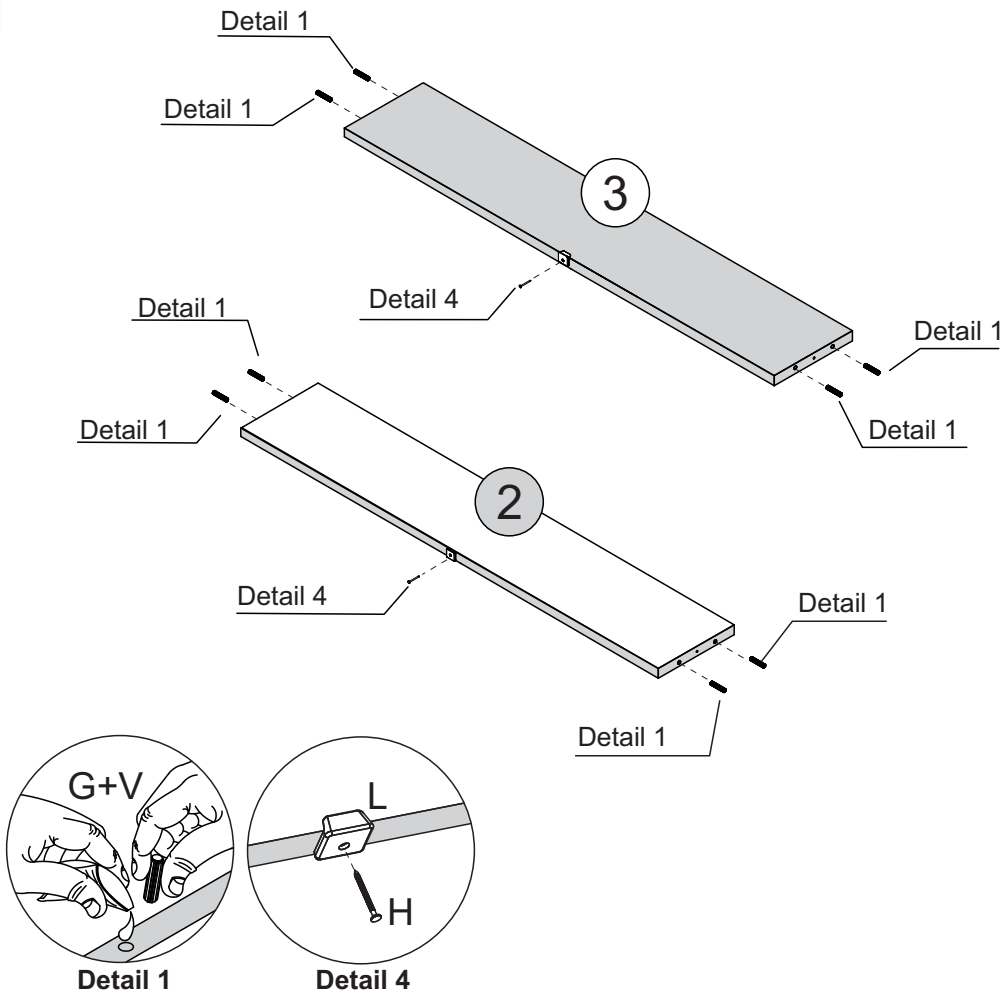

STEP 7

PARTS REQUIRED

1A - BASE PANEL	x1
1B - TOP PANEL	x1
5 - RIGHT SIDE PANEL	x1

HARDWARE REQUIRED

F	Ø4,0 x 50mm	04
V	Glue	01

TOOLS REQUIRED

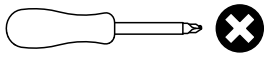

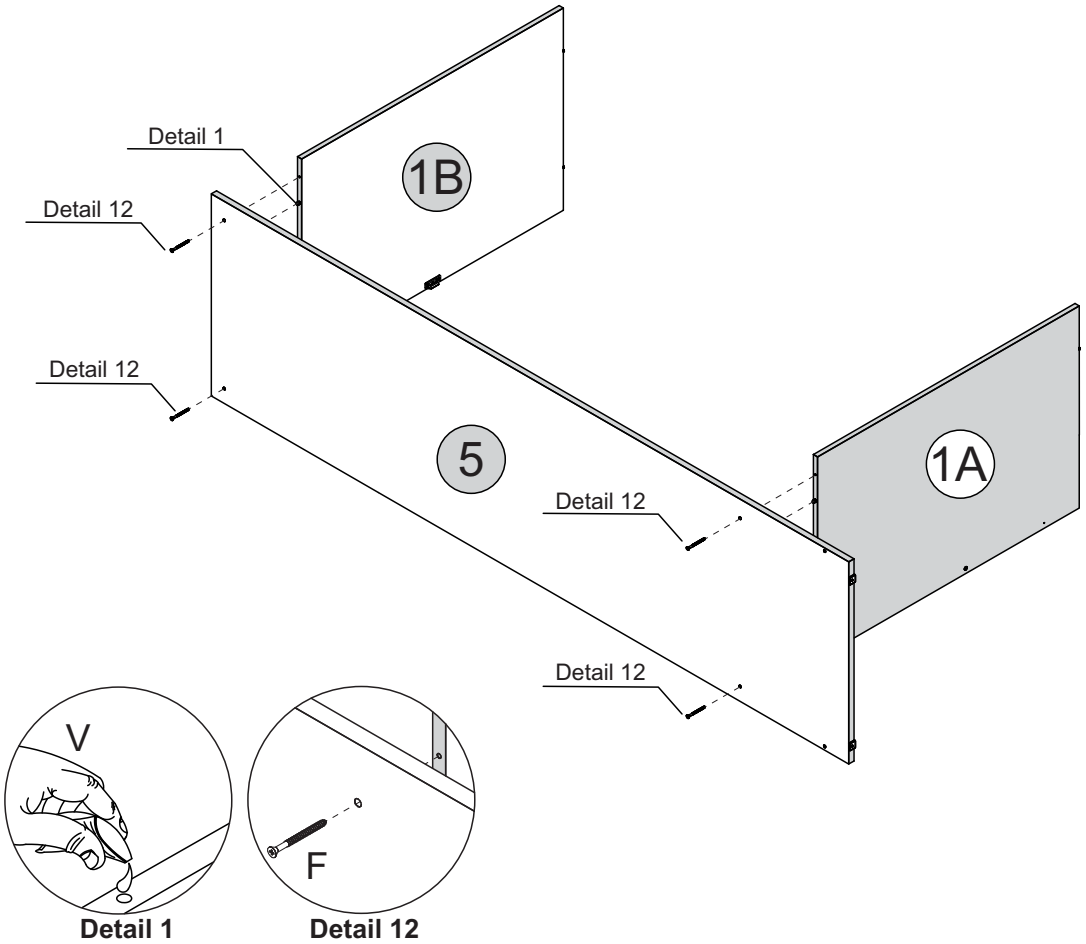

STEP 8

PARTS REQUIRED

2 - FRONT BASEBOARD	x1
3 - BACK BASEBOARD	x1
4 - LEFT SIDE PANEL	x1

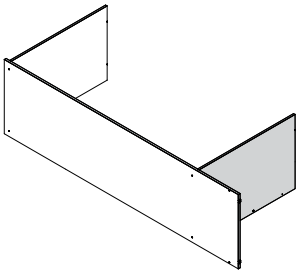

HARDWARE REQUIRED

F	Ø4,0 x 50mm	08
V	Glue	01

TOOLS REQUIRED

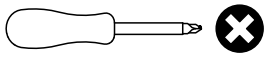

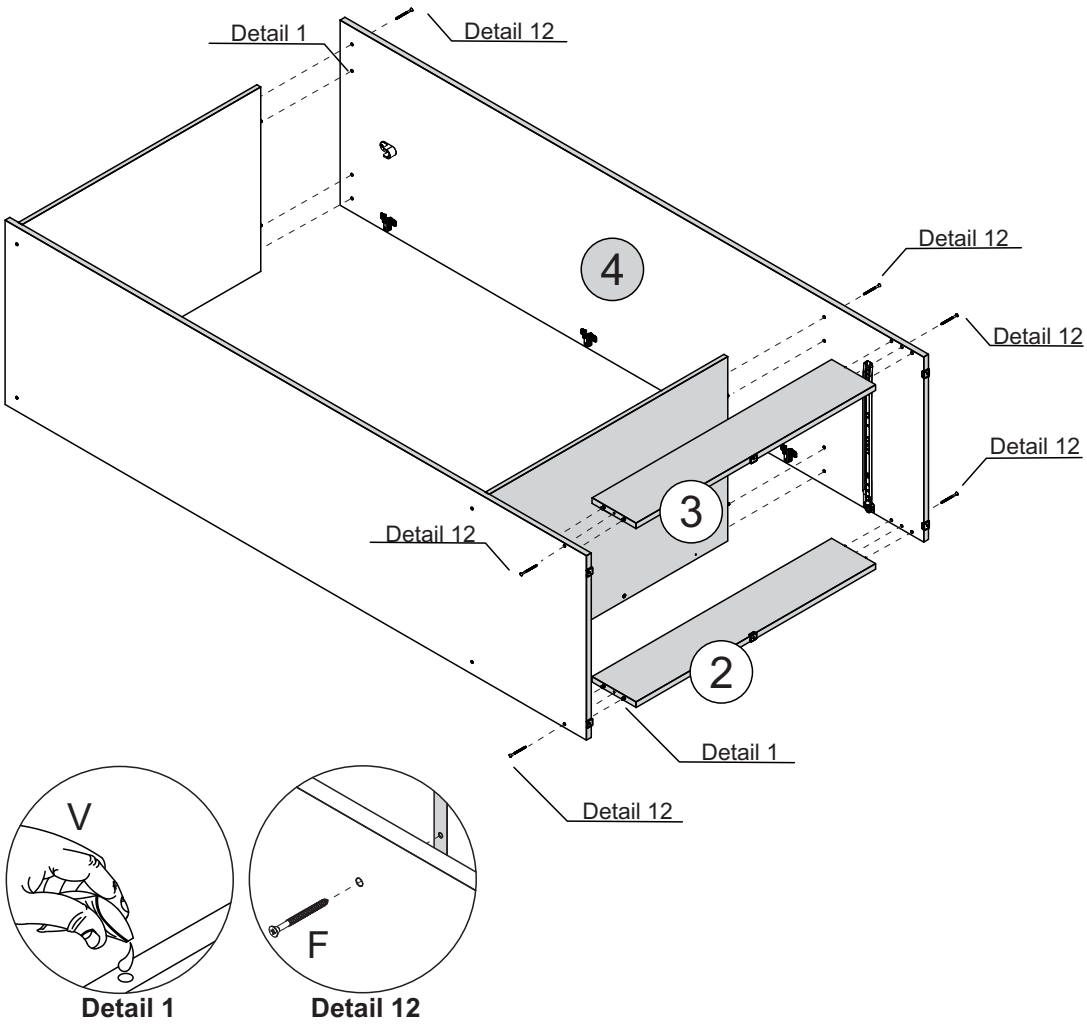

STEP 9

PARTS REQUIRED

6 - BACK PANEL	x2

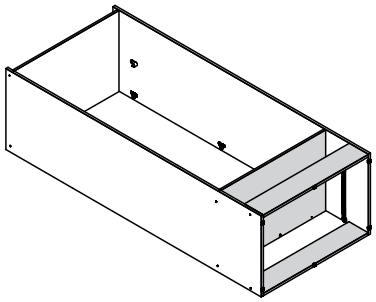

HARDWARE REQUIRED

B	Ø4,0 x 14mm	06
H	10 x 10	06
R		01

TOOLS REQUIRED

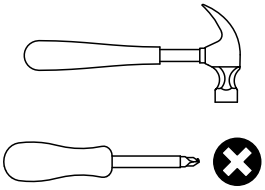

IMPORTANT PLEASE FOLLOW !

Please make sure Part 6 is lined up correctly at the top before placing fitting H into the panel as this can affect the alignment of the doors once assembled.

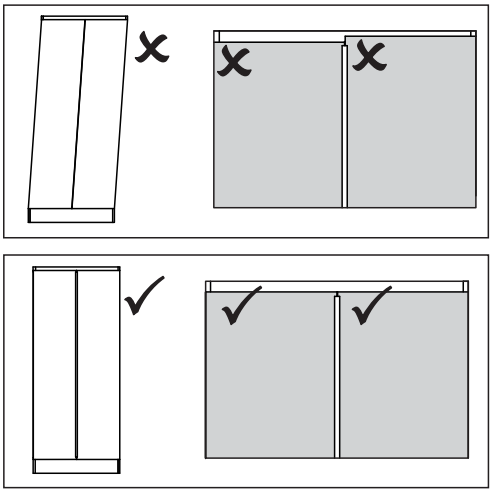

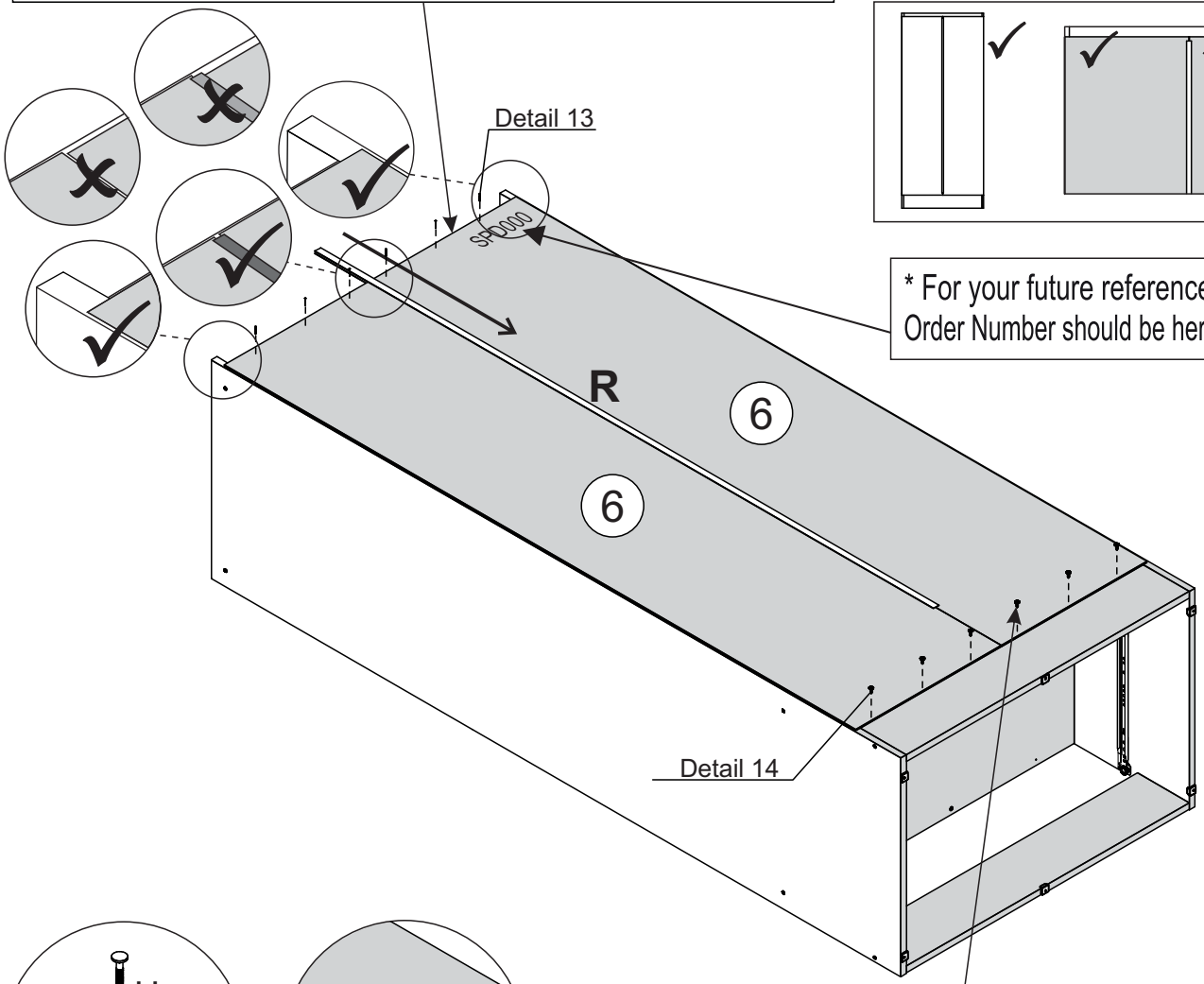

* For your future reference Order Number should be here

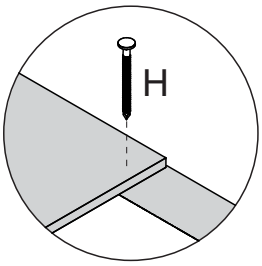

Detail 13

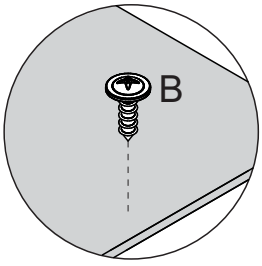

Detail 14

IMPORTANT PLEASE FOLLOW !

Please make sure Part 6 isn't overhanging at the sides before you screw fitting B into the plinth.

STEP 10

PARTS REQUIRED

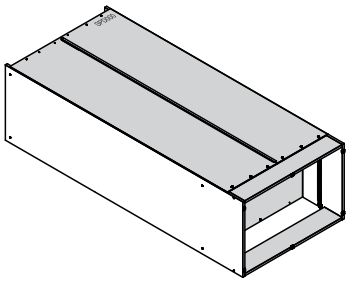

HARDWARE REQUIRED

H	10 x 10	36

TOOLS REQUIRED

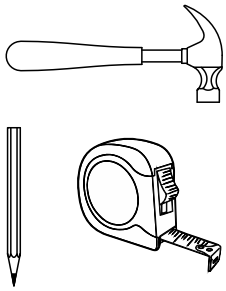

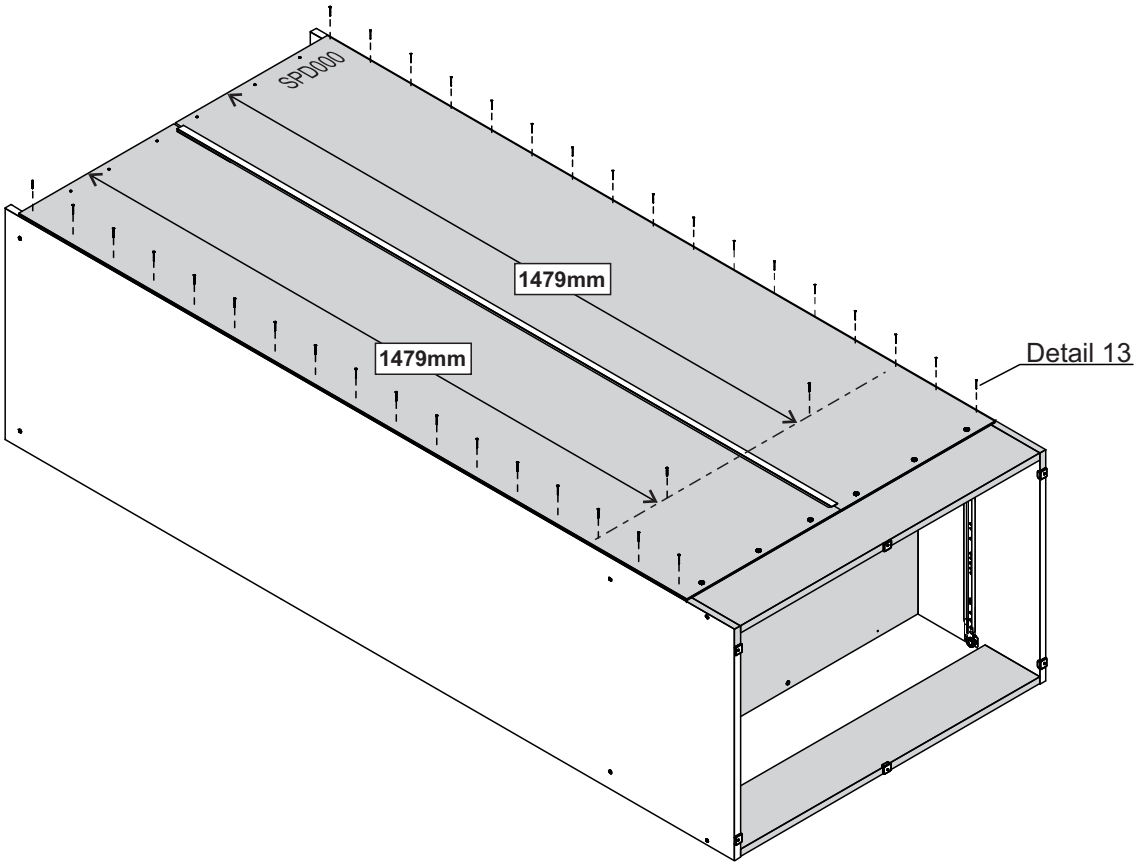

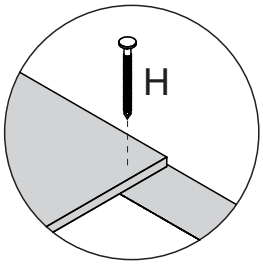

Detail 13

STEP 11

PARTS REQUIRED

7 - FRAME	x1

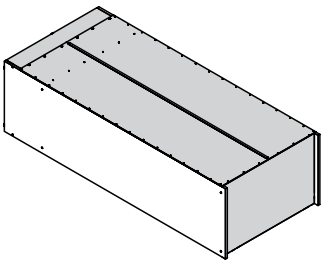

HARDWARE REQUIRED

J		02
Y	Ø4,0 x 12mm	06

TOOLS REQUIRED

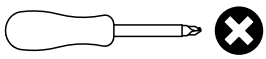

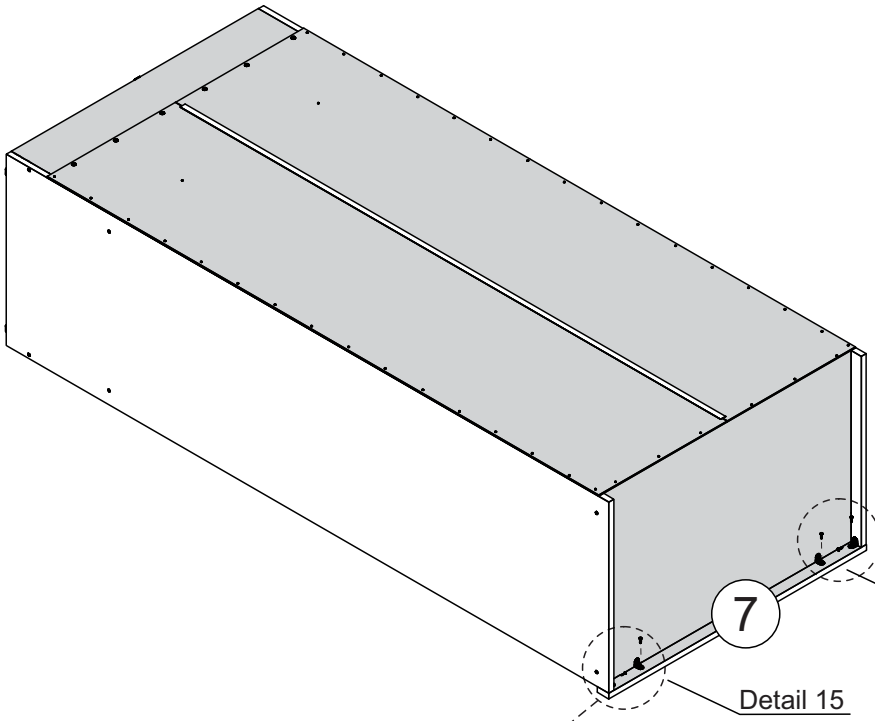

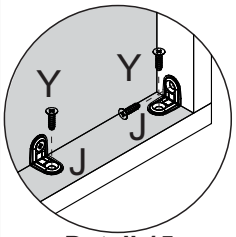

Detail 15

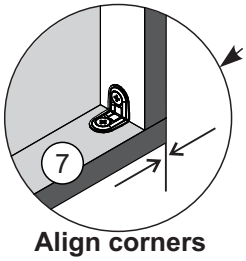

Align corners

STEP 12

PARTS REQUIRED

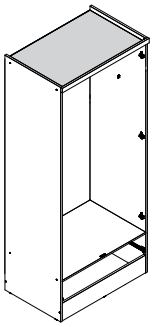

HARDWARE REQUIRED

N		01

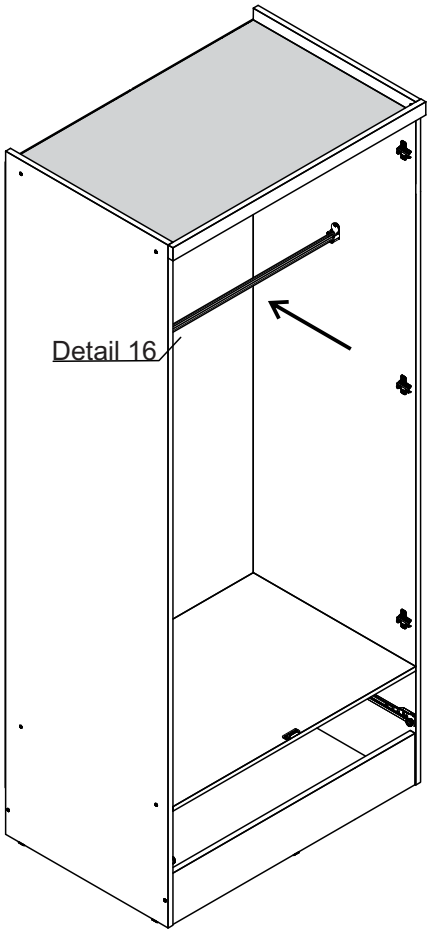

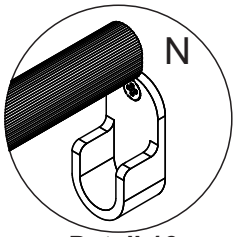

Detail 16

STEP 13

PARTS REQUIRED

9 - DRAWER SIDE	x2
10 - DRAWER BACK PANEL	x1
13 - DRAWER BOTTOM SUPPORT BAR	x1

HARDWARE REQUIRED

G	Ø6,0 x 30mm	10
V	Glue	01

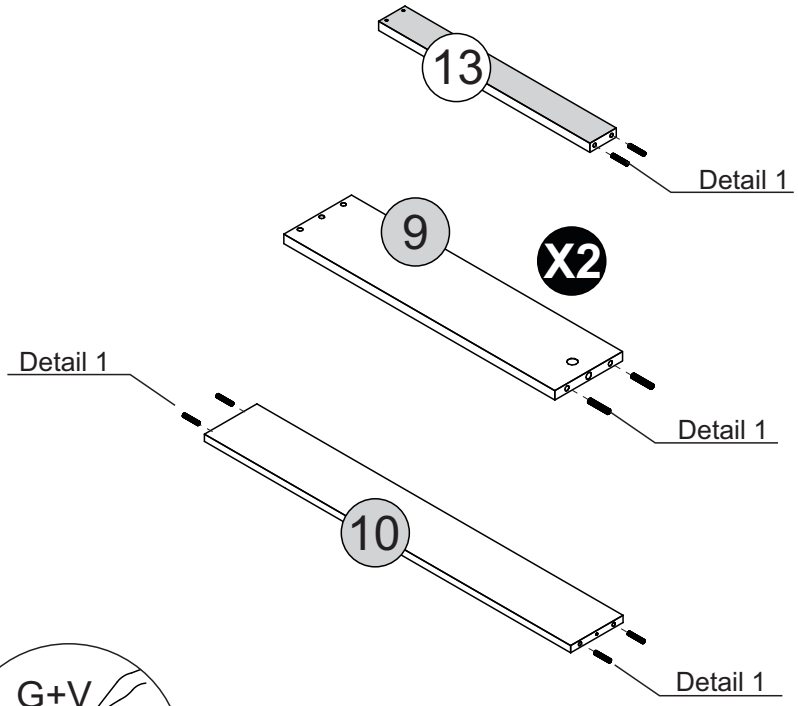

Detail 1

STEP 14

PARTS REQUIRED

11 - DRAWER FRONT	x1

HARDWARE REQUIRED

X		02

TOOLS REQUIRED

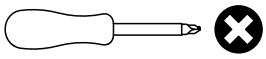

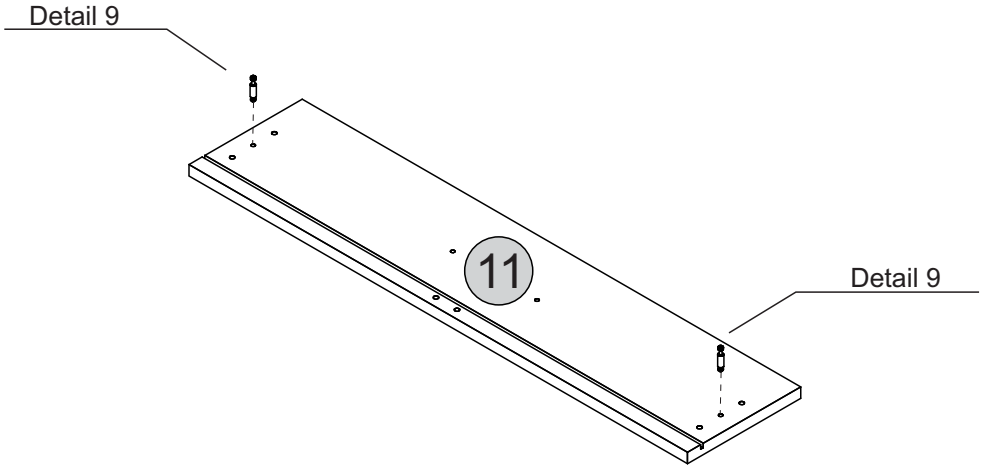

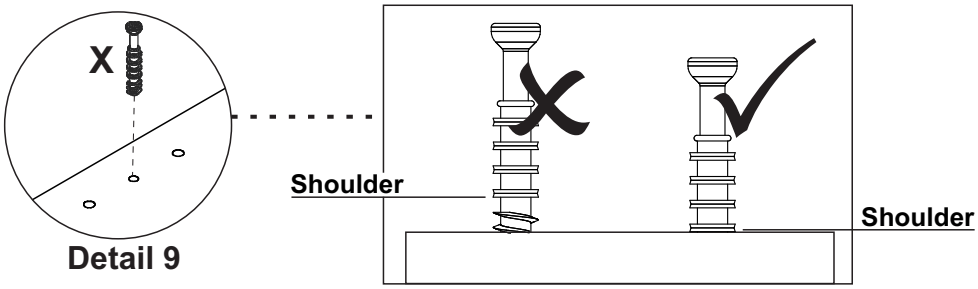

Detail 9

STEP 15

PARTS REQUIRED

9 - DRAWER SIDE	x2
10 - DRAWER BACK PANEL	x2

HARDWARE REQUIRED

F	Ø4,0 x 50mm	02

TOOLS REQUIRED

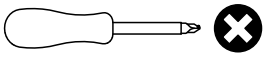

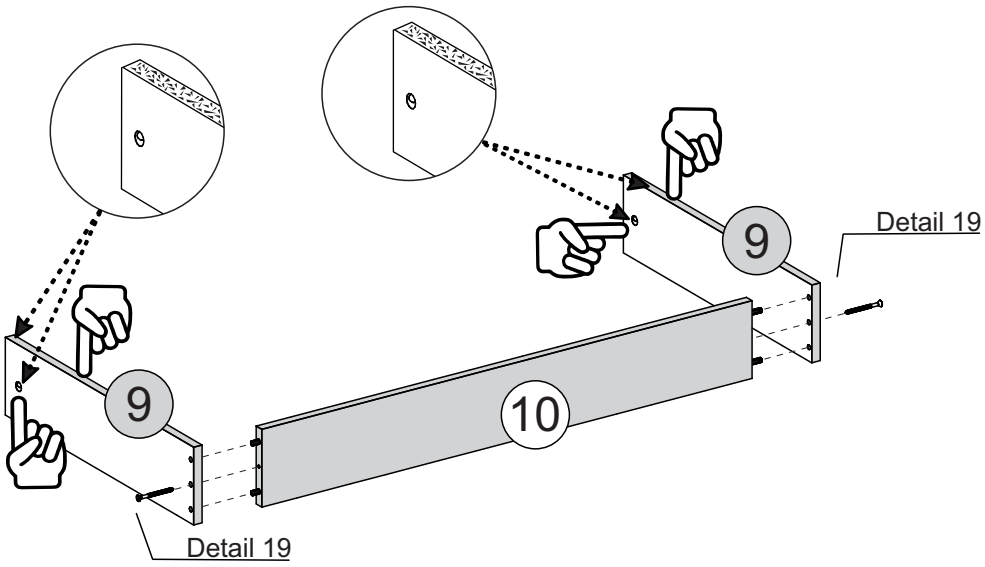

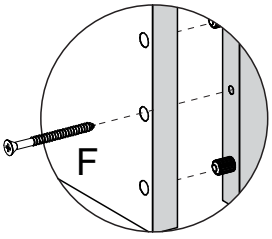

Detail 19

STEP 16

PARTS REQUIRED

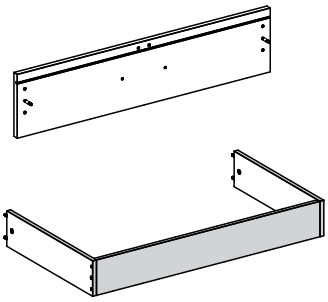

HARDWARE REQUIRED

A1		02
V	Glue	01
W		02

TOOLS REQUIRED

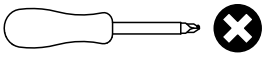

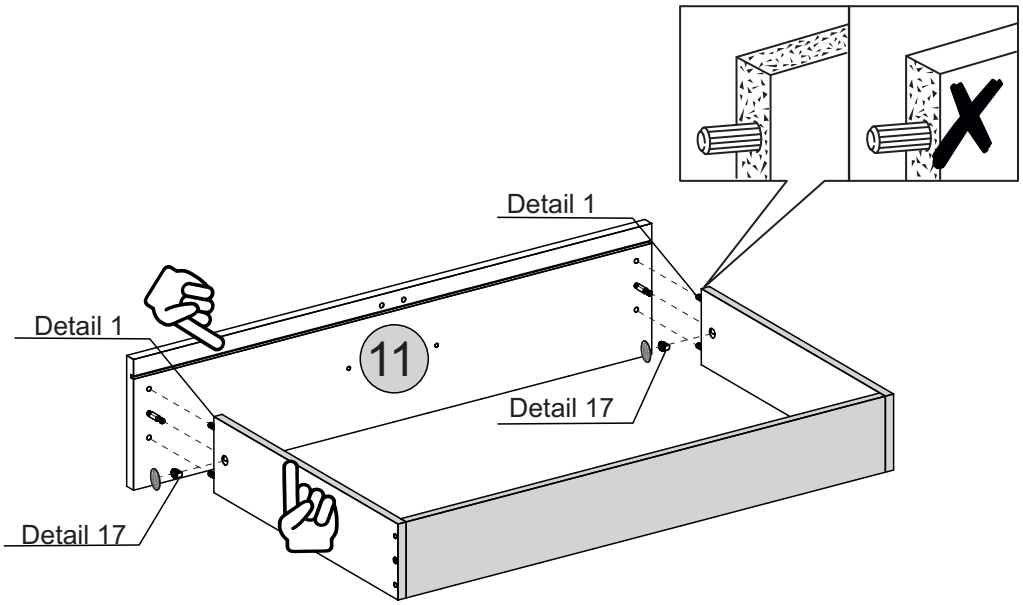

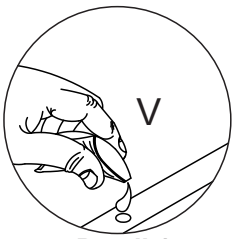

Detail 1

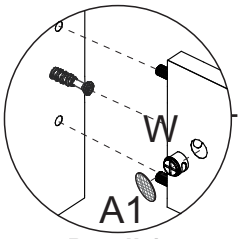

Detail 17

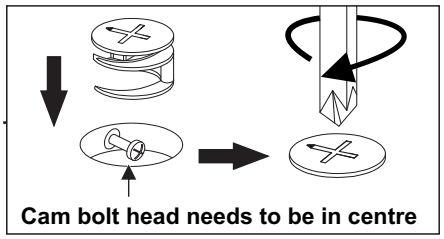

Cam bolt head needs to be in centre

STEP 17

PARTS REQUIRED

12 - DRAWER BOTTOM	x1

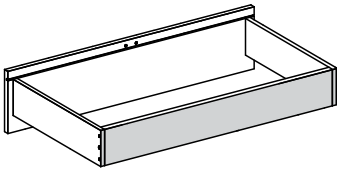

HARDWARE REQUIRED

H	10 x 10	04

TOOLS REQUIRED

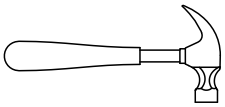

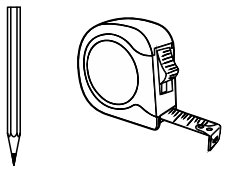

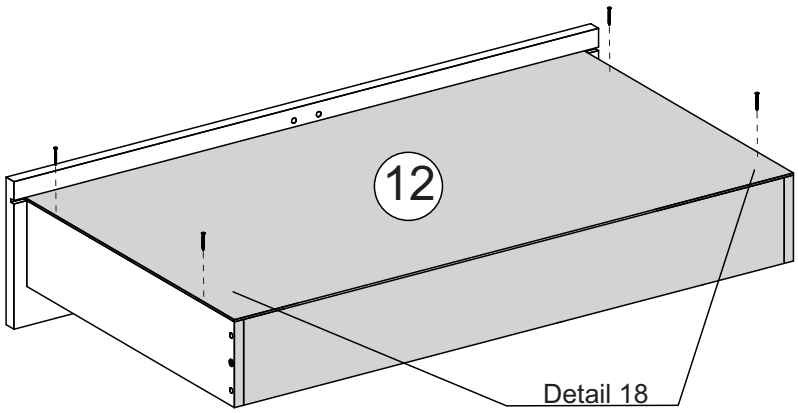

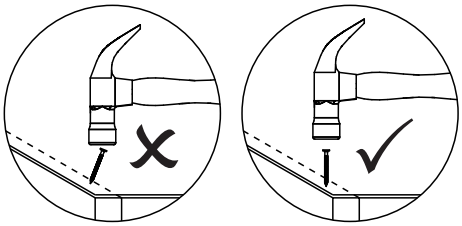

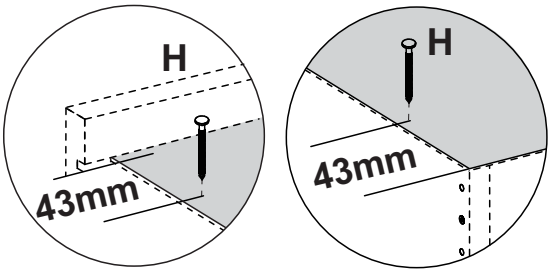

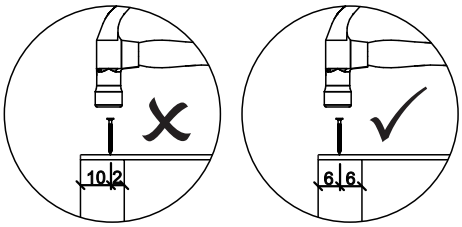

Detail 18

STEP 18

PARTS REQUIRED

13 - DRAWER BOTTOM SUPPORT BAR	x1

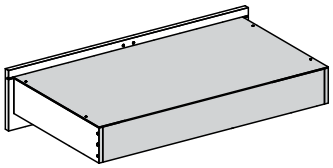

HARDWARE REQUIRED

H	10 x 10	06

TOOLS REQUIRED

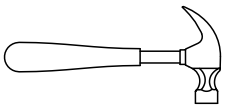

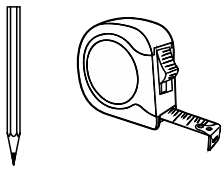

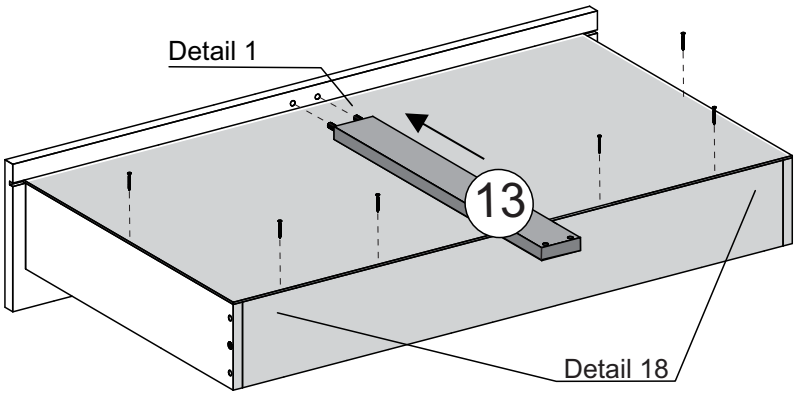

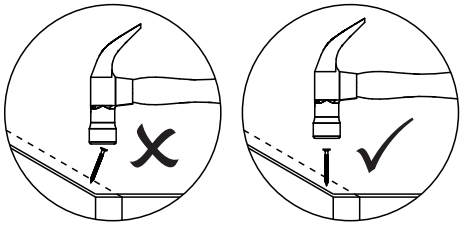

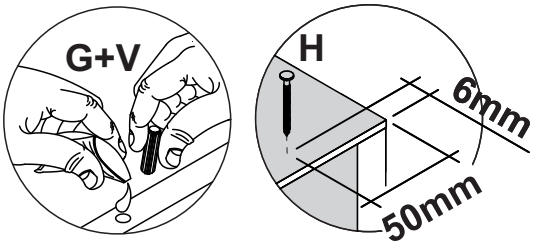

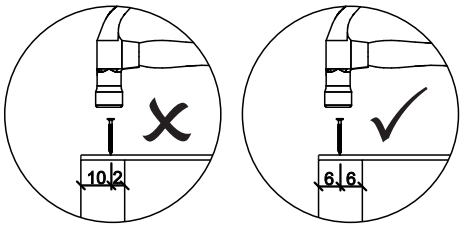

Detail 1 **Detail 18**

STEP 19

PARTS REQUIRED

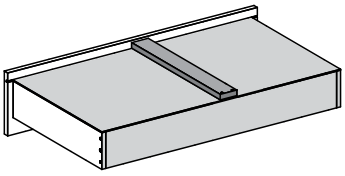

HARDWARE REQUIRED

C	Ø4,0 x 14mm	04
E	Ø3,5 x 40mm	02
Q	LEFT	01
Q	RIGHT	01

TOOLS REQUIRED

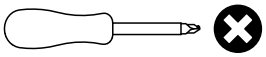

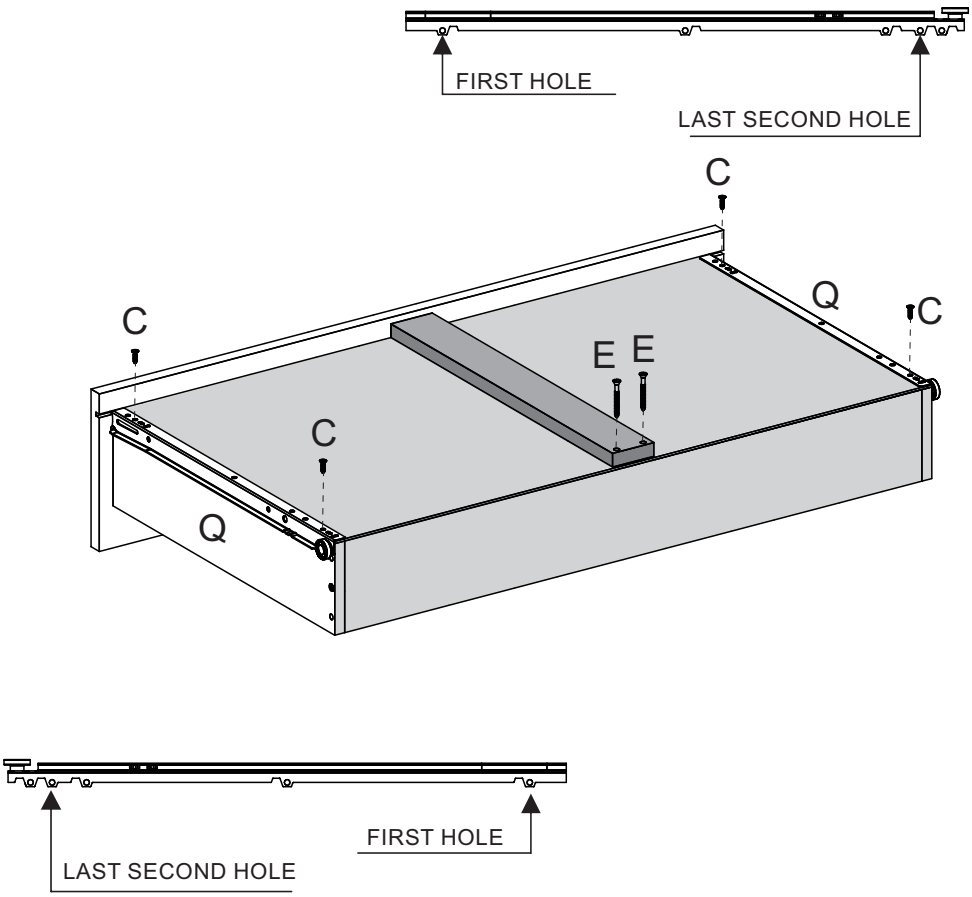

STEP 20

PARTS REQUIRED

8 - DOOR	x2

HARDWARE REQUIRED

C	Ø4,0 x 14mm	12
O		06

TOOLS REQUIRED

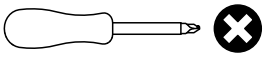

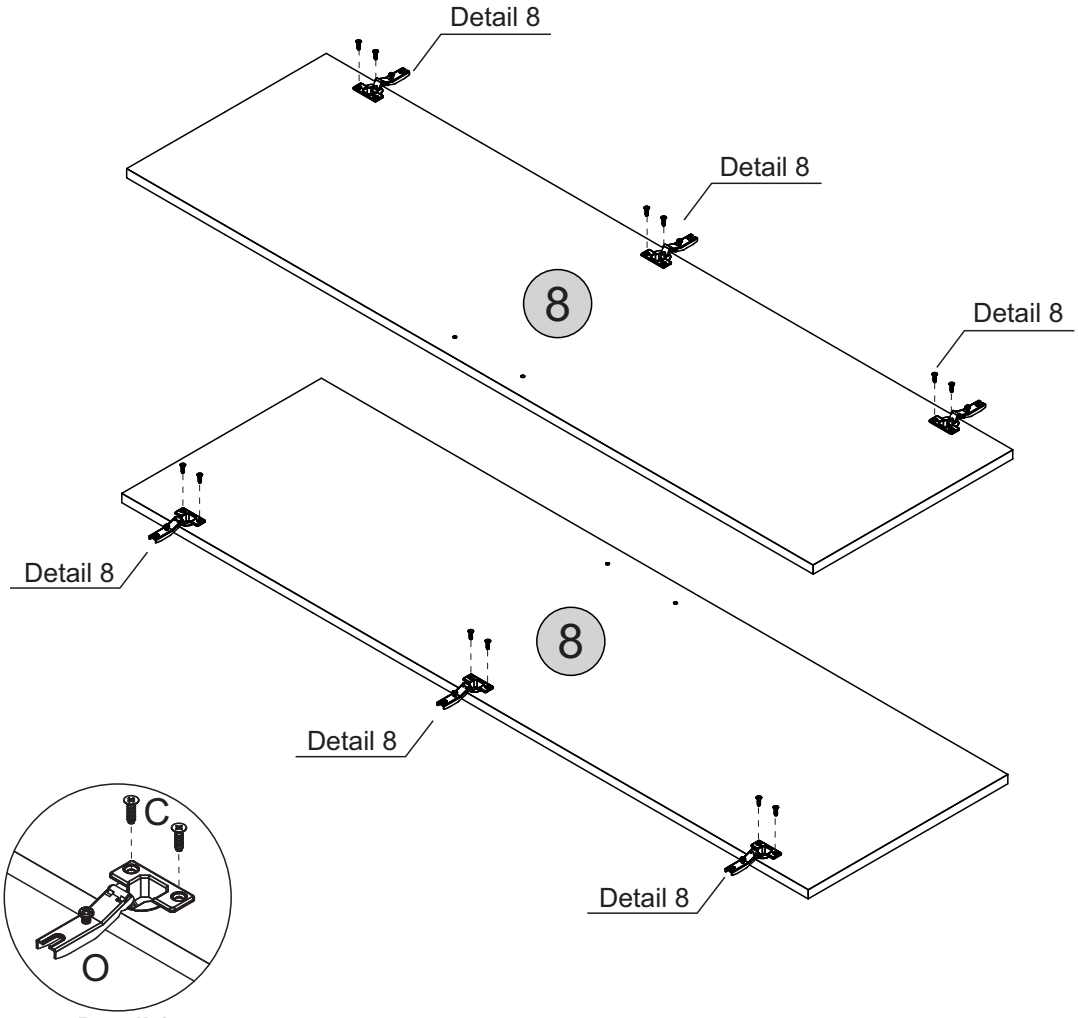

Detail 8

STEP 21

PARTS REQUIRED

8 - DOOR	x2

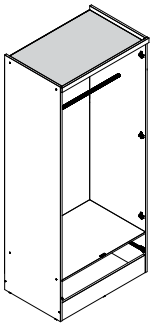

HARDWARE REQUIRED

U		12

TOOLS REQUIRED

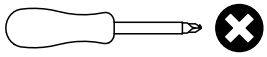

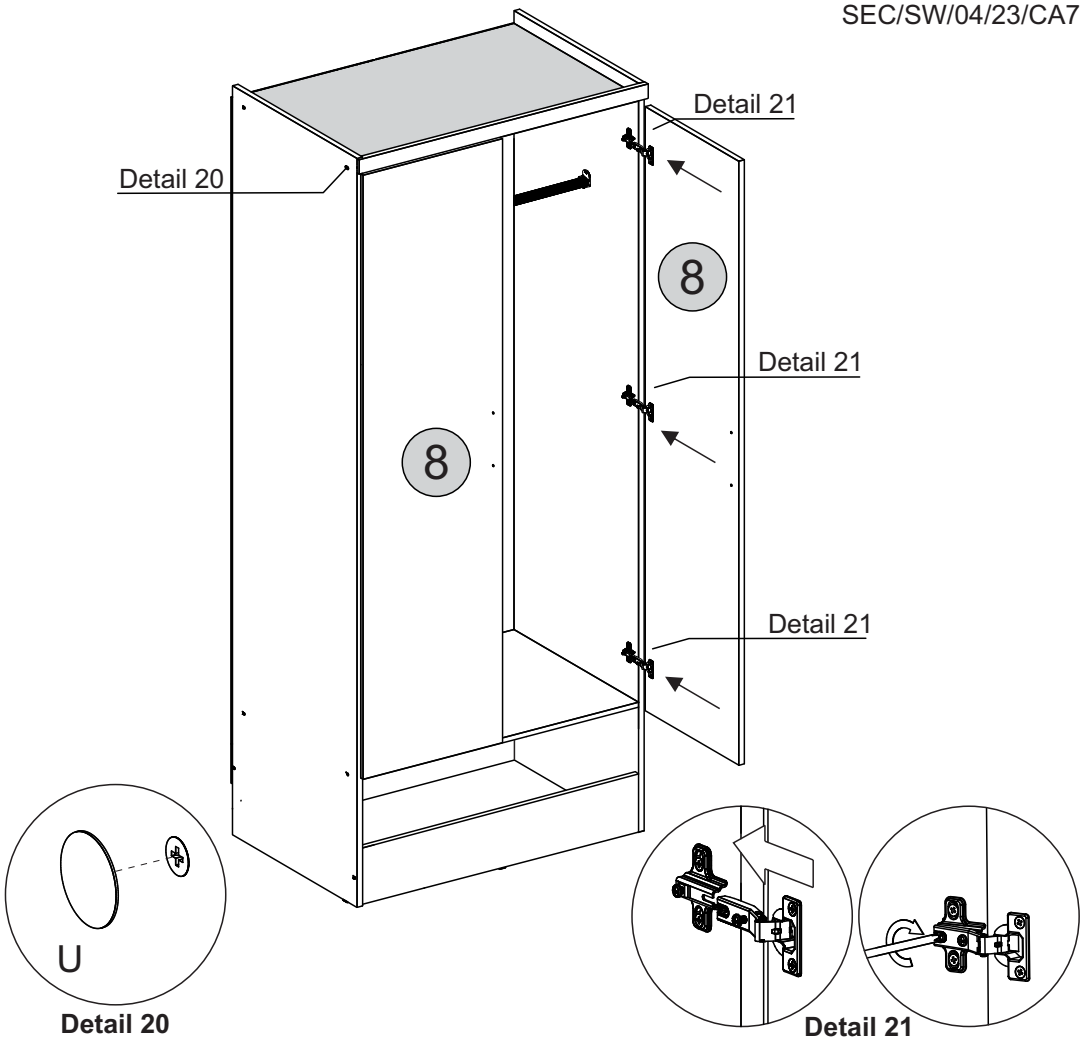

STEP 22

PARTS REQUIRED

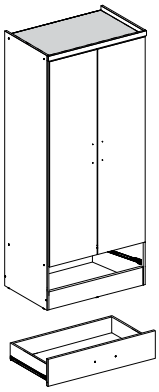

HARDWARE REQUIRED

D	Ø4,0 x 20mm	06
T		03

TOOLS REQUIRED

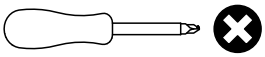

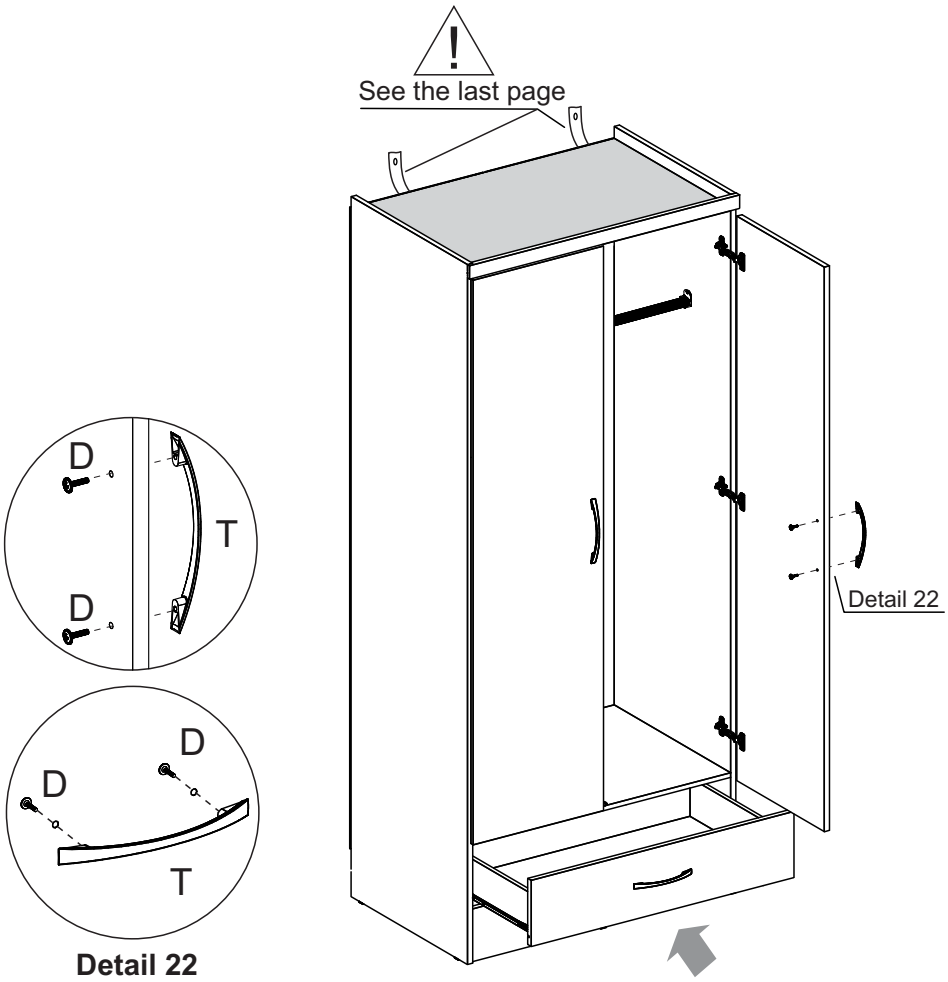

STEP 23

PARTS REQUIRED

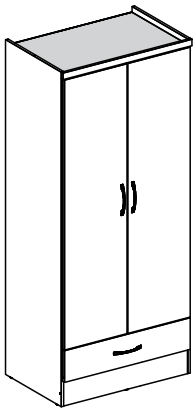

HARDWARE REQUIRED

C	Ø4,0 x 14mm	02

TOOLS REQUIRED

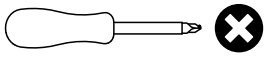

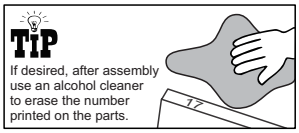

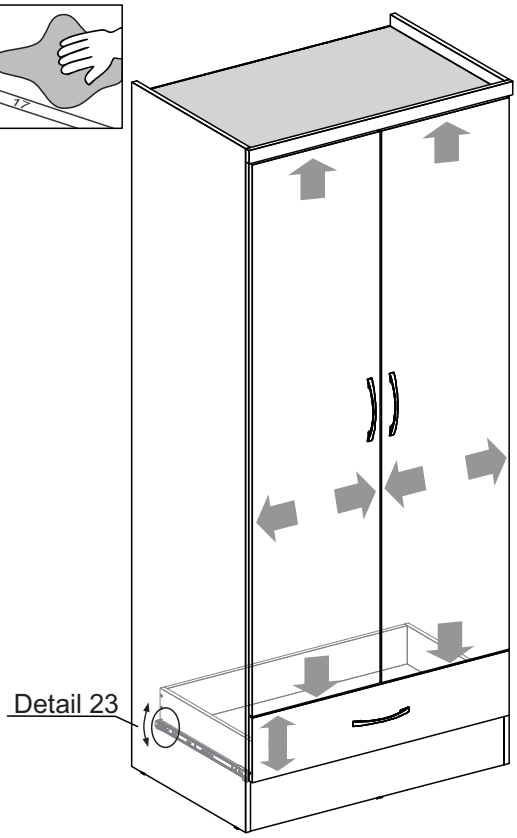

Drawer Adjustment

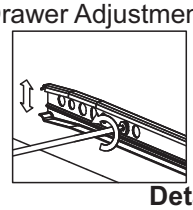

Drawer Lock

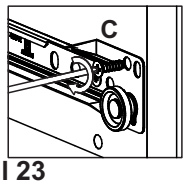

Detail 23

Height Adjustment

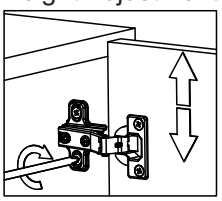

Internal Adjustment

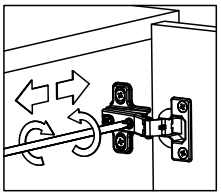

Depth Adjustment

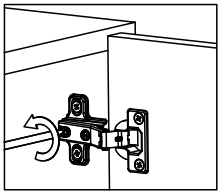

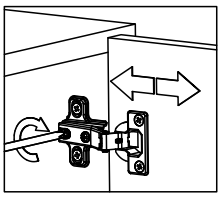

WARNING

Serious or fatal injuries can occur from furniture tipping over. To prevent the furniture from tipping over we recommend that it is permanently fixed to the wall.

Wall fixings are not supplied with this product as different wall materials require different types of fixing devices.
Please make sure you use fixings suitable for the walls in your home.

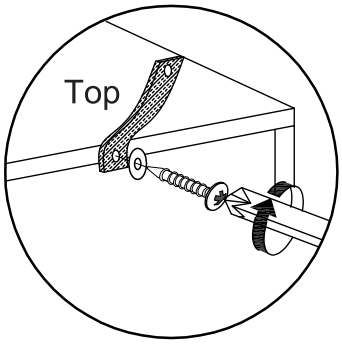

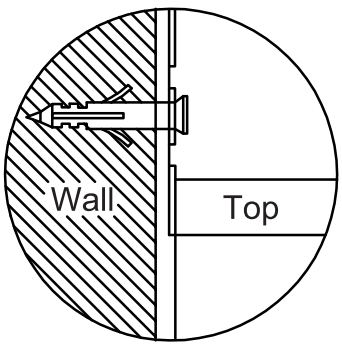

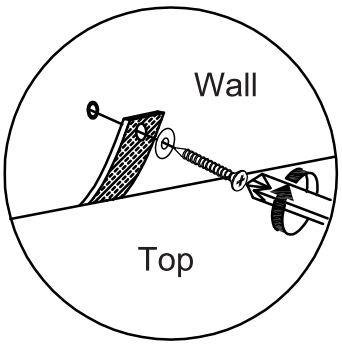

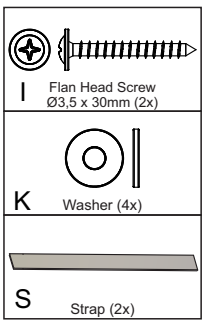

NEVADA 3+2 DRAWER CHEST ASSEMBLY INSTRUCTIONS

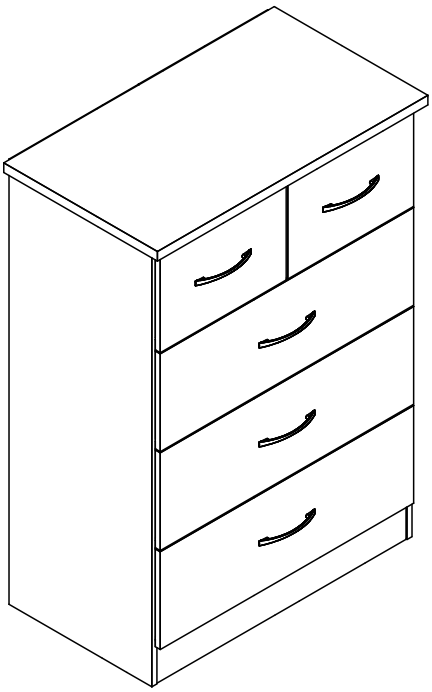

IMPORTANT

FOR DOMESTIC USE ONLY

PLEASE READ BEFORE YOU CONTINUE FURTHER

CARE AND MAINTENANCE

After unpacking this product please keep the original packaging in case it needs to be returned for any reason.

- Please ensure all fittings and parts are present before commencing with assembly.
- Never drag or push products as this could cause damage to the joints making it inferior.
- We strongly recommend that you keep children away from your work area.
- We recommend that you lay a blanket or sheet on the floor to avoid damage to both your floor and the product.
- Assemble this product as close to its final position as possible.
- Do not place this product next to a radiator or in direct sunlight.
- Do not drag or push items across your high gloss furniture as this may cause the surface to scratch
- Wood is a natural product and may expand if subjected to damp and may shrink or crack if subjected to heat. Therefore it is recommended that room temperature is maintained, with no sudden temperature fluctuations.
- Make sure any spillage is wiped off immediately.
- Do not place hot or chilled items directly on to the surface, use a place mat or marking will occur.
- For general cleaning use a soft cotton or micro fibre cloth, and do not use detergents of any kind.
- From time to time it may be necessary to tighten fittings, regular inspections should be carried out.
- Do not place on a wet or damp floor as staining may occur to your floor.

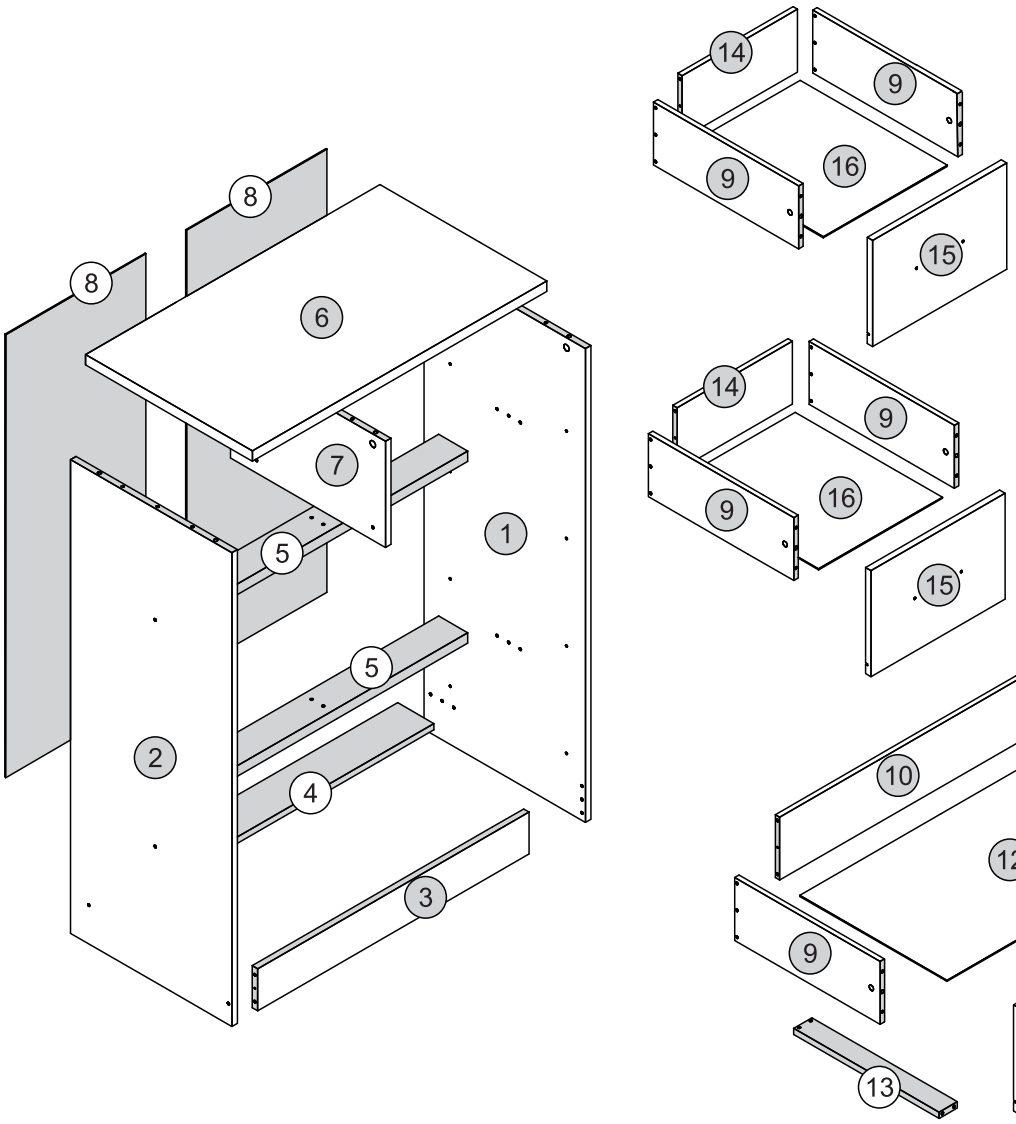

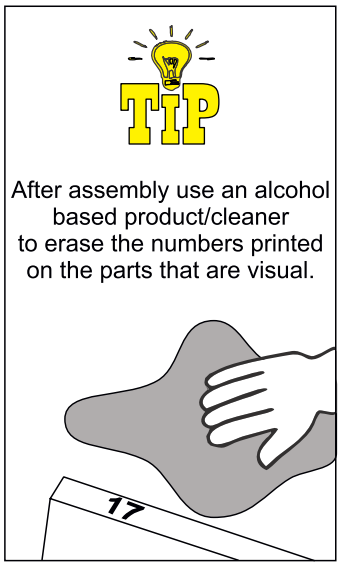

PARTS LIST

Please Note:
The below parts have all been stamped with the part number to help identify them during assembly.

Part Number	Part Description	Quantity	Carton
01	Right Side Panel	1	1/2
02	Left Side Panel	1	1/2
03	Front Baseboard	1	1/2
04	Back Baseboard	1	1/2
05	Crossbar	2	2/2
06	Top Panel	1	2/2
07	Division Panel	1	1/2
08	Back Panel	1	1/2
09	Drawer Side	10	1/2
10	Large Drawer Back Panel	3	1/2
11	Large Drawer Front	3	2/2
12	Large Drawer Bottom	3	2/2
13	Drawer Bottom Support Bar	3	1/2
14	Small Drawer Back Panel	2	1/2
15	Small Drawer Front	2	2/2
16	Small Drawer Bottom	2	1/2

TOOLS REQUIRED

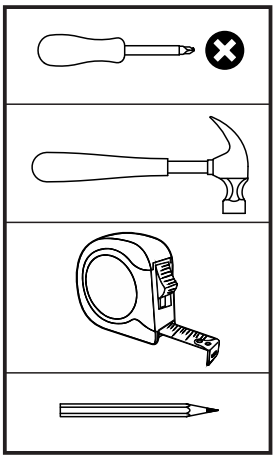

FITTINGS LIST

A Flat Head Screw 2/+ Ø6,0 x 10mm (16x)	**B** Double Flat Head Screw 1/+ Ø4,0 x 18mm (2x)	**C** Flat Head Screw 2/+ Ø4,0 x 14mm (30x)	**D** Flan Head Screw 2/+ Ø4,0 x 20mm (10x)
E Flat Head Screw 1/+ Ø3,5 x 40mm (6x)	**F** Flat Head Screw 2/+ Ø4,0 x 50mm (19x)	**G** 2/+ Dowel Ø6,0 x 30mm (69x)	**H** 2/+ Nail 10 x 10 (84x)
I 1/+ Back Panel Bracket (2x)	**J** 2/+ Cam Nut Ø12mm (10x)	**K** 1/+ Washer (4x)	**L** 1/+ Plastic Foot (6x)
M Flan Head Screw 1/+ Ø3,5 x 30mm (2x)	**N** 2/+ Cam Bolt (16x)	**O** 2/+ Hole Plugs (8x)	**P** GLUE Glue (2x)
Q Drawer Runners (5x)	**R** Back Panel Strip (1x)	**S** Strap (2x)	**T** Handle (5x)
U 1/+ Cam Nut Ø15mm (6x)	**V** 2/+ Hole Plugs (10x)		

TIPS FOR FITTINGS CAM-LOCKS

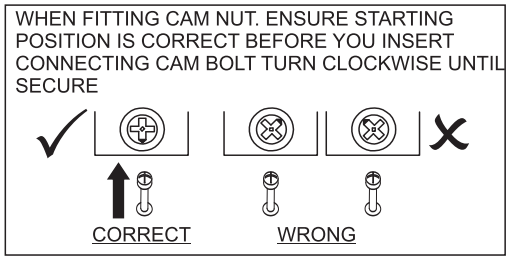

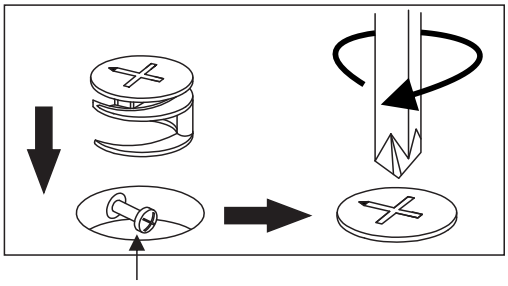

Cam bolt head needs to be in centre

CAMBOLT
Tighten until shoulder in flush with panel. Do not overtighten or undertighten (see example beside)

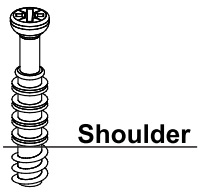

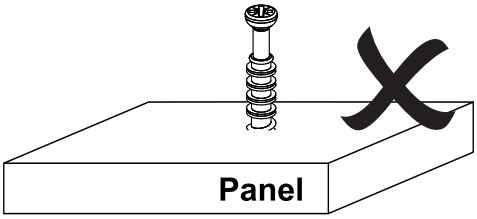

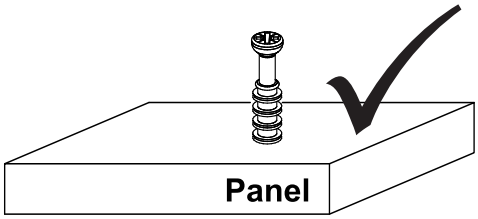

STEP 1

PARTS REQUIRED

2 - LEFT SIDE PANEL	x1

HARDWARE REQUIRED

G	Ø6 x 30	02
H	10 x 10	02
L		02
P	GLUE	01

TOOLS REQUIRED

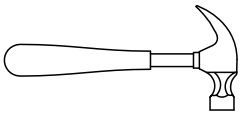

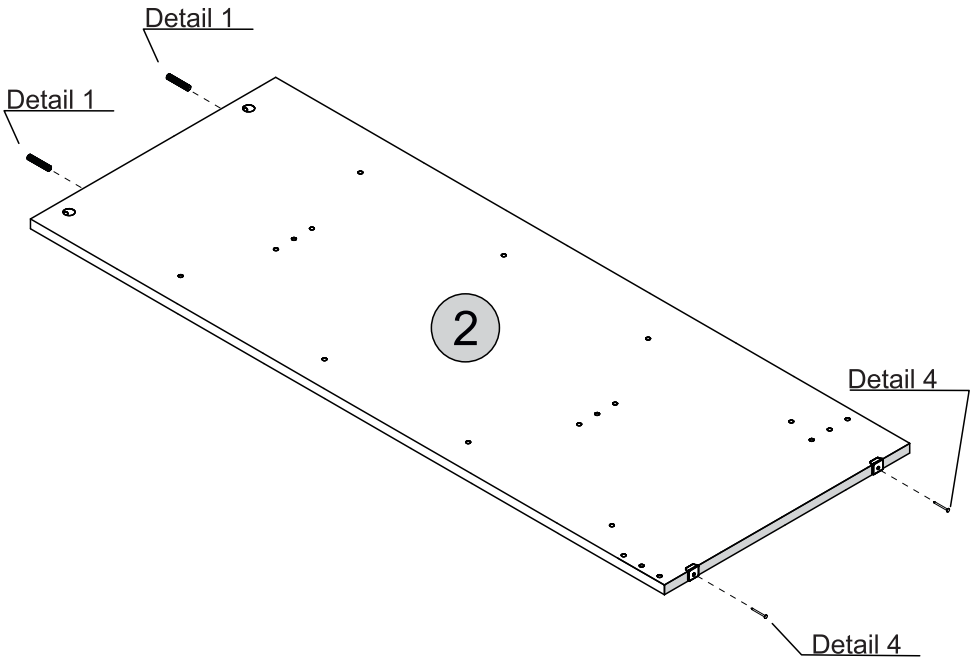

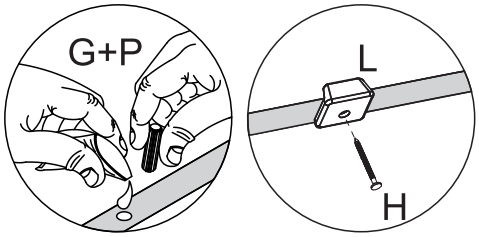

Detail 1 **Detail 4**

STEP 2

PARTS REQUIRED

1 - RIGHT SIDE PANEL	x1

HARDWARE REQUIRED

G	Ø6 x 30	02
H	10 x 10	02
L		02
P	GLUE	01

TOOLS REQUIRED

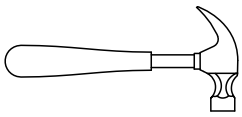

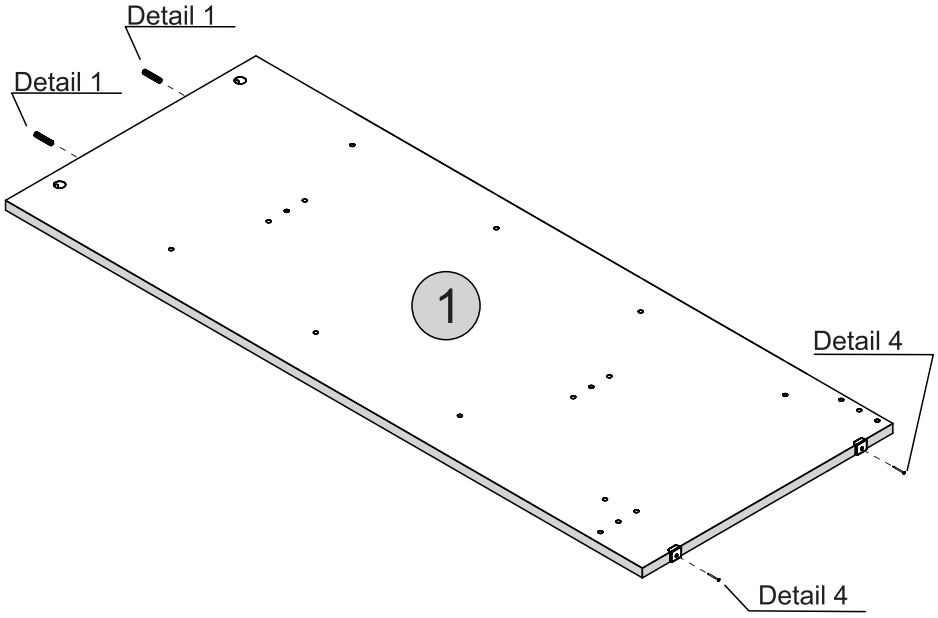

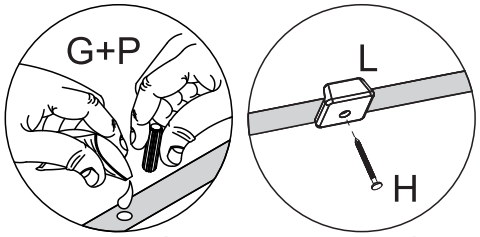

Detail 1 **Detail 4**

STEP 3

PARTS REQUIRED

2 - LEFT SIDE PANEL	x1

HARDWARE REQUIRED

A	Ø6 x 10	08
Q	LEFT	04

TOOLS REQUIRED

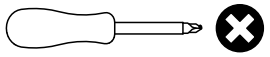

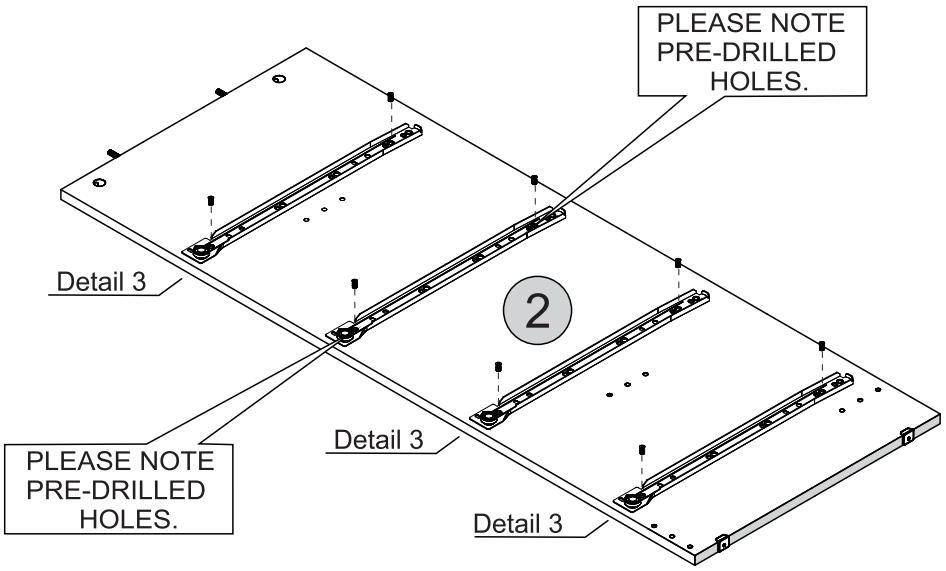

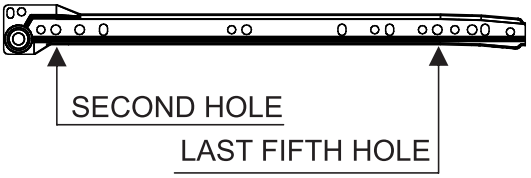

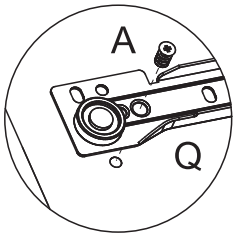

Detail 3

STEP 4

PARTS REQUIRED

1 - RIGHT SIDE PANEL	x1

HARDWARE REQUIRED

A	Ø6 x 10	08
Q	RIGHT	04

TOOLS REQUIRED

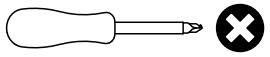

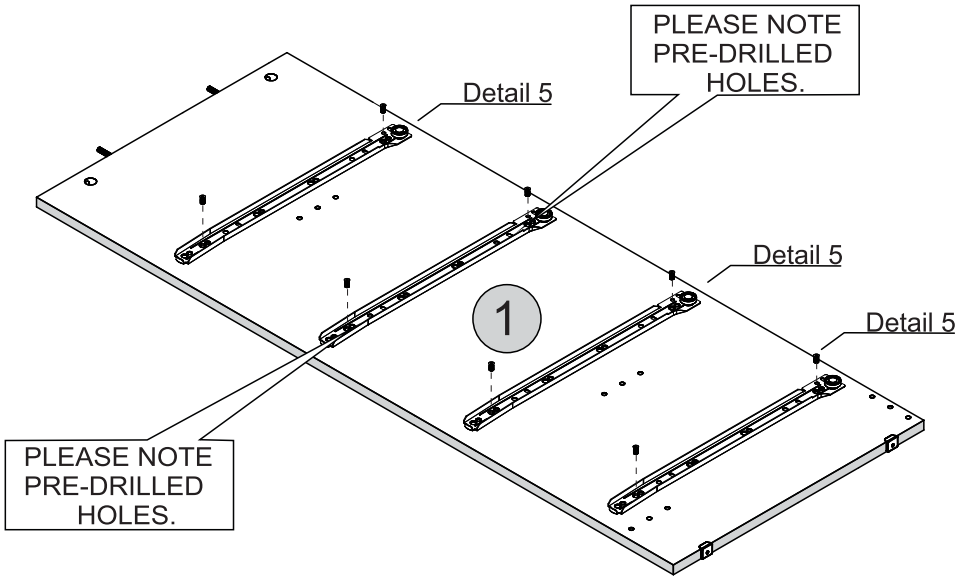

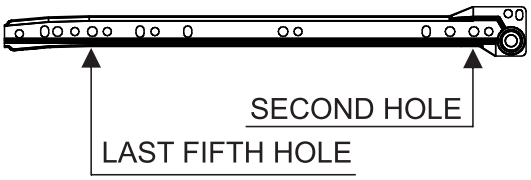

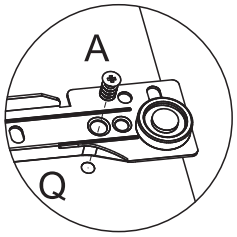

Detail 5

STEP 5

PARTS REQUIRED

3 -	FRONT BASEBOARD	x1
4 -	BACK BASEBOARD	x1
5 -	CROSSBAR	x2

HARDWARE REQUIRED

G	Ø6 x 30	16
H	10 x 10	02
L		02
P	GLUE	01

TOOLS REQUIRED

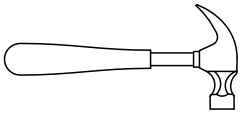

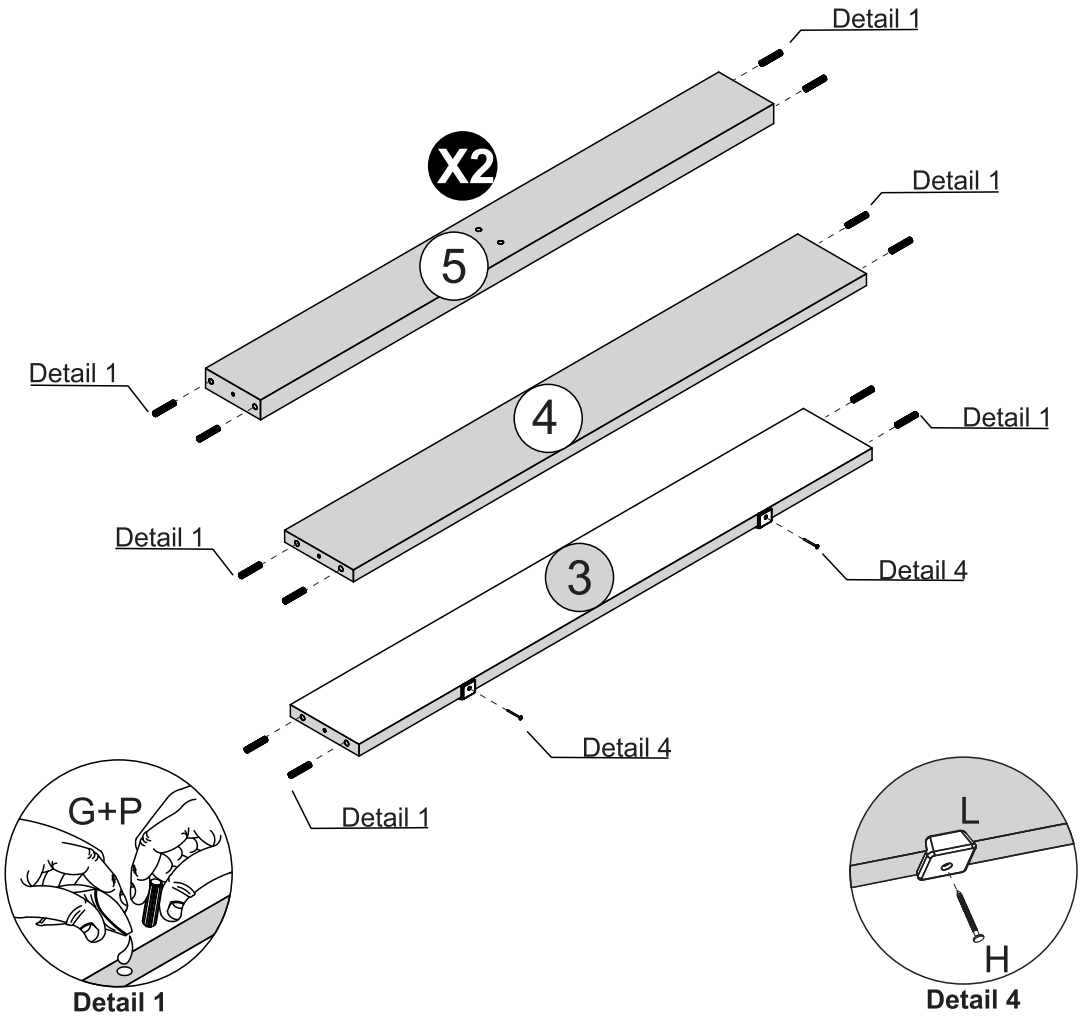

STEP 6

PARTS REQUIRED

7 -	DIVISION PANEL	x1

HARDWARE REQUIRED

B	Ø4.0 x 18mm	02
G	Ø6 x 30	03
P	GLUE	01
Q	LEFT	01
Q	RIGHT	01

TOOLS REQUIRED

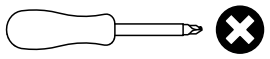

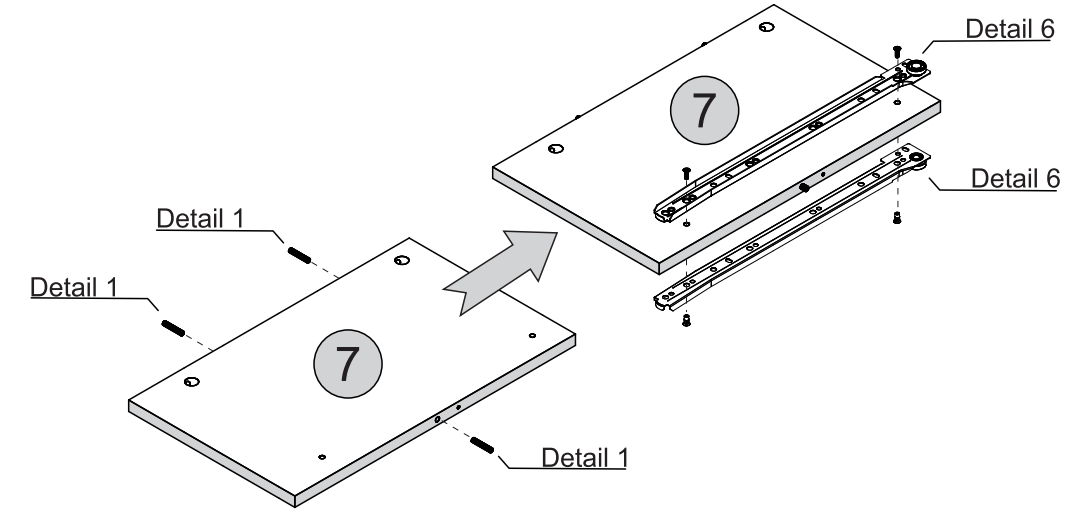

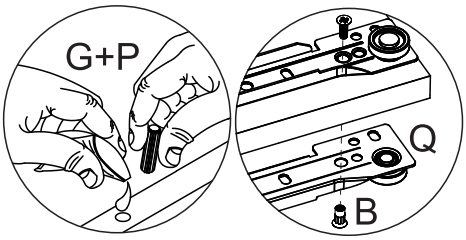

STEP 7

PARTS REQUIRED

1 - RIGHT SIDE PANEL		x1
3 - FRONT BASEBOARD		x1
4 - BACK BASEBOARD		x1
5 - CROSSBAR		x2

HARDWARE REQUIRED

F	Ø4 x 50	04
P	GLUE	01

TOOLS REQUIRED

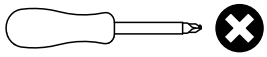

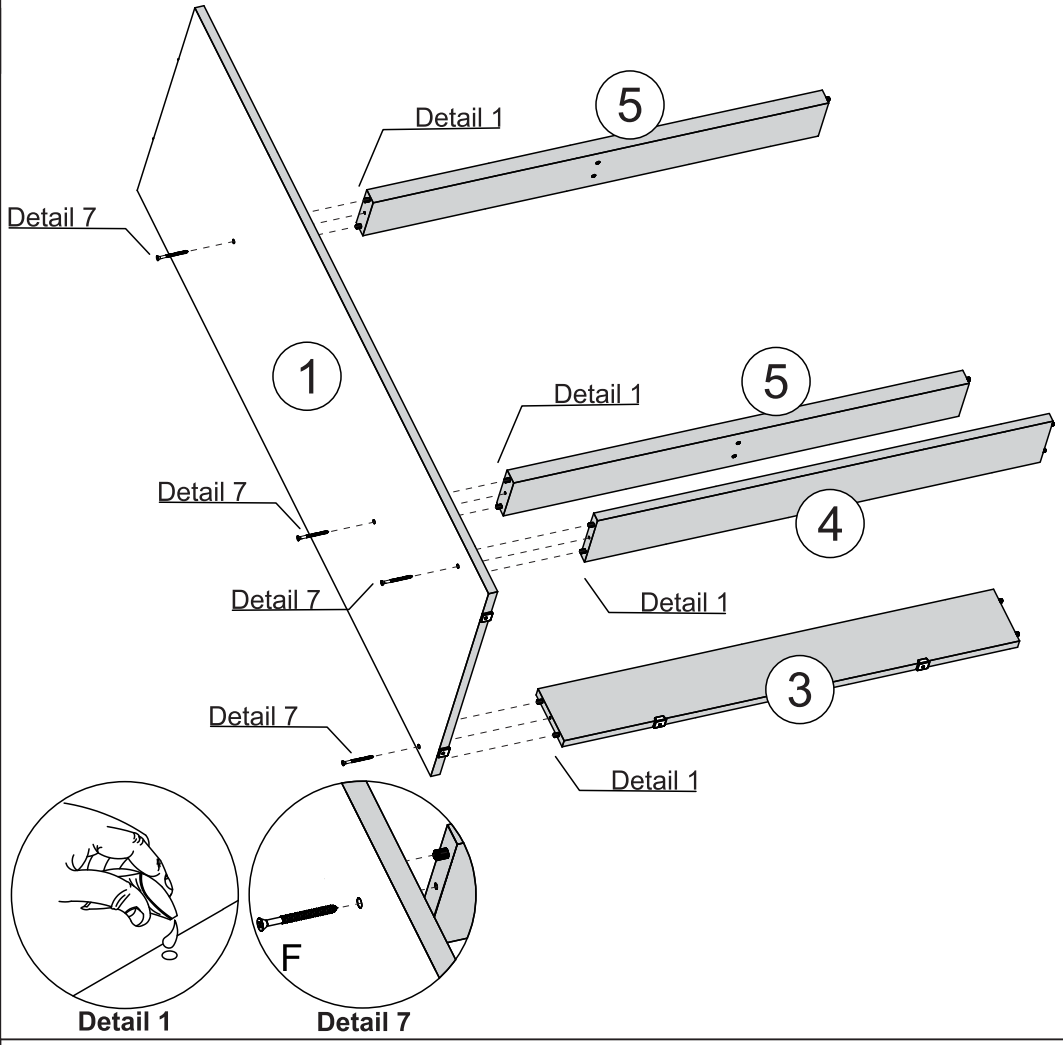

STEP 8

PARTS REQUIRED

2 - LEFT SIDE PANEL		x1

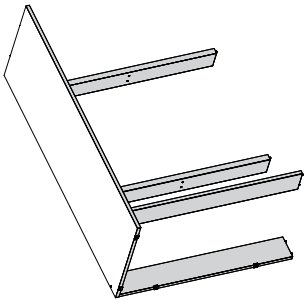

HARDWARE REQUIRED

F	Ø4 x 50	04
P	GLUE	01

TOOLS REQUIRED

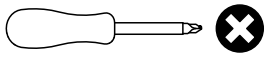

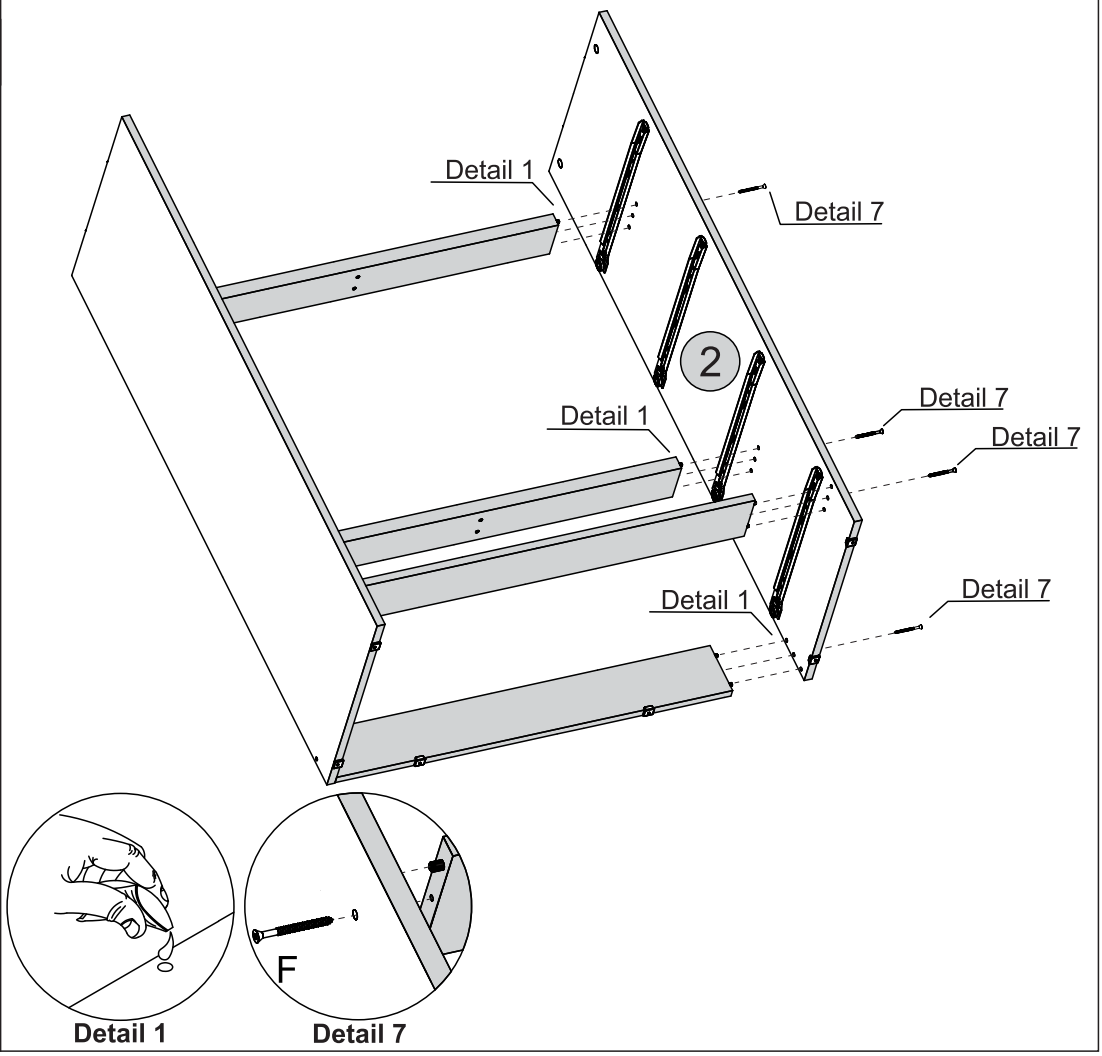

STEP 9

PARTS REQUIRED

6 - TOP PANEL	x1

HARDWARE REQUIRED

N	06

TOOLS REQUIRED

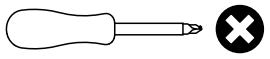

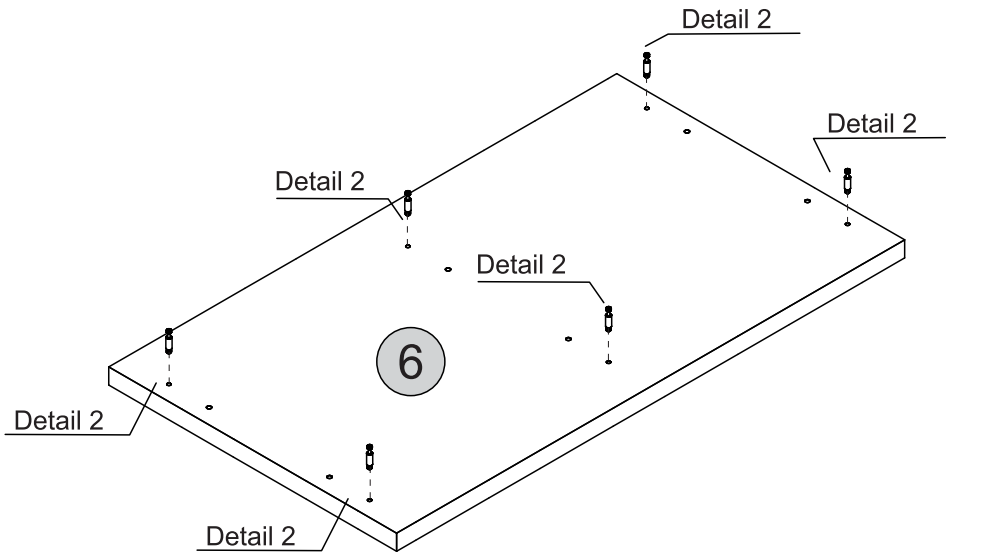

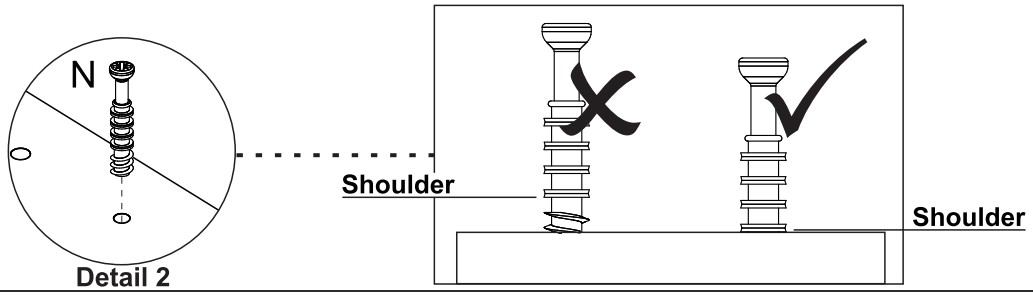

STEP 10

PARTS REQUIRED

6 - TOP PANEL	x1
7 - DIVISION PANEL	x1

HARDWARE REQUIRED

U	02

TOOLS REQUIRED

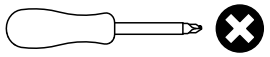

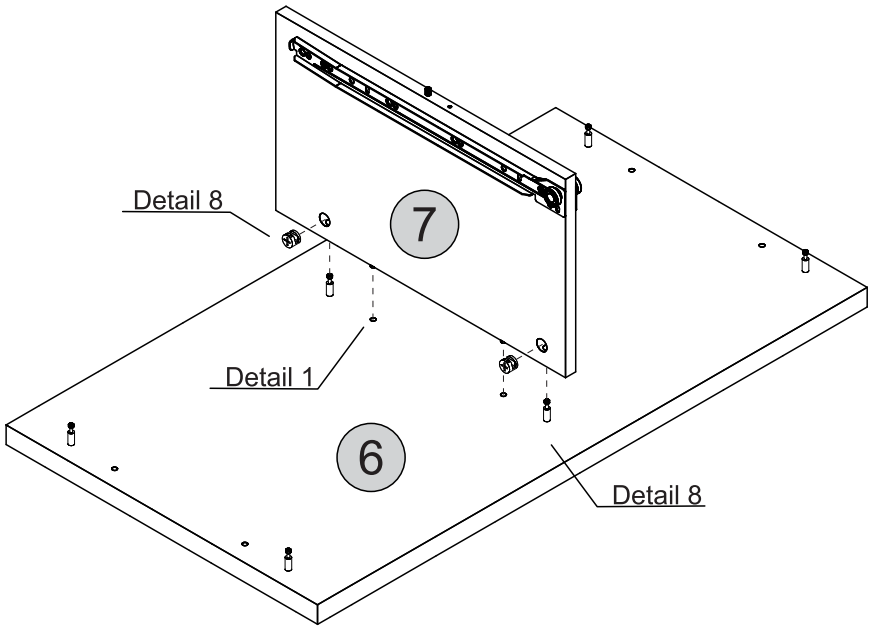

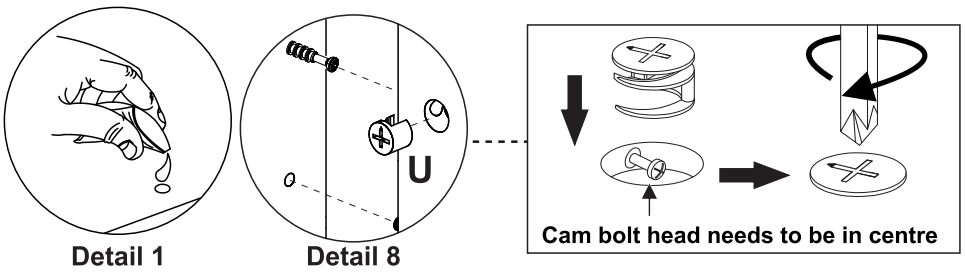

STEP 11

PARTS REQUIRED

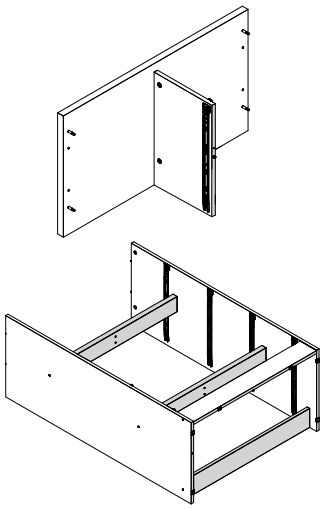

HARDWARE REQUIRED

F	Ø4 x 50	01
P	GLUE	01
U		04

TOOLS REQUIRED

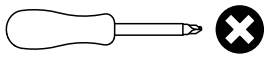

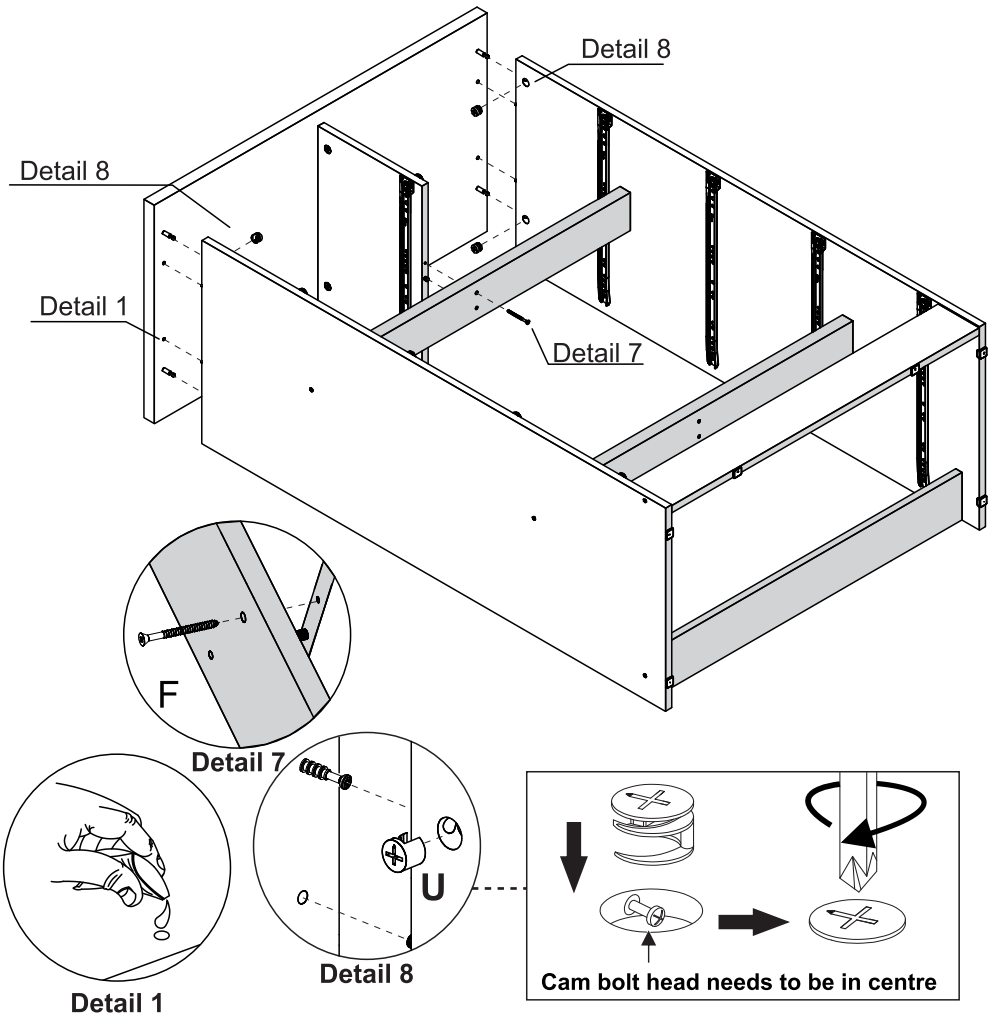

STEP 12

PARTS REQUIRED

8 - BACK PANEL	x2

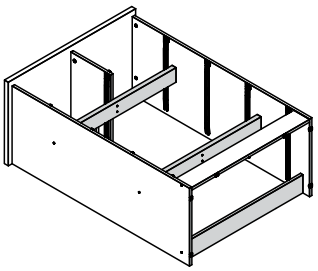

HARDWARE REQUIRED

H		32
I		02
R		01

TOOLS REQUIRED

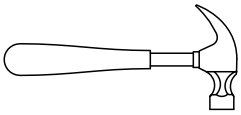

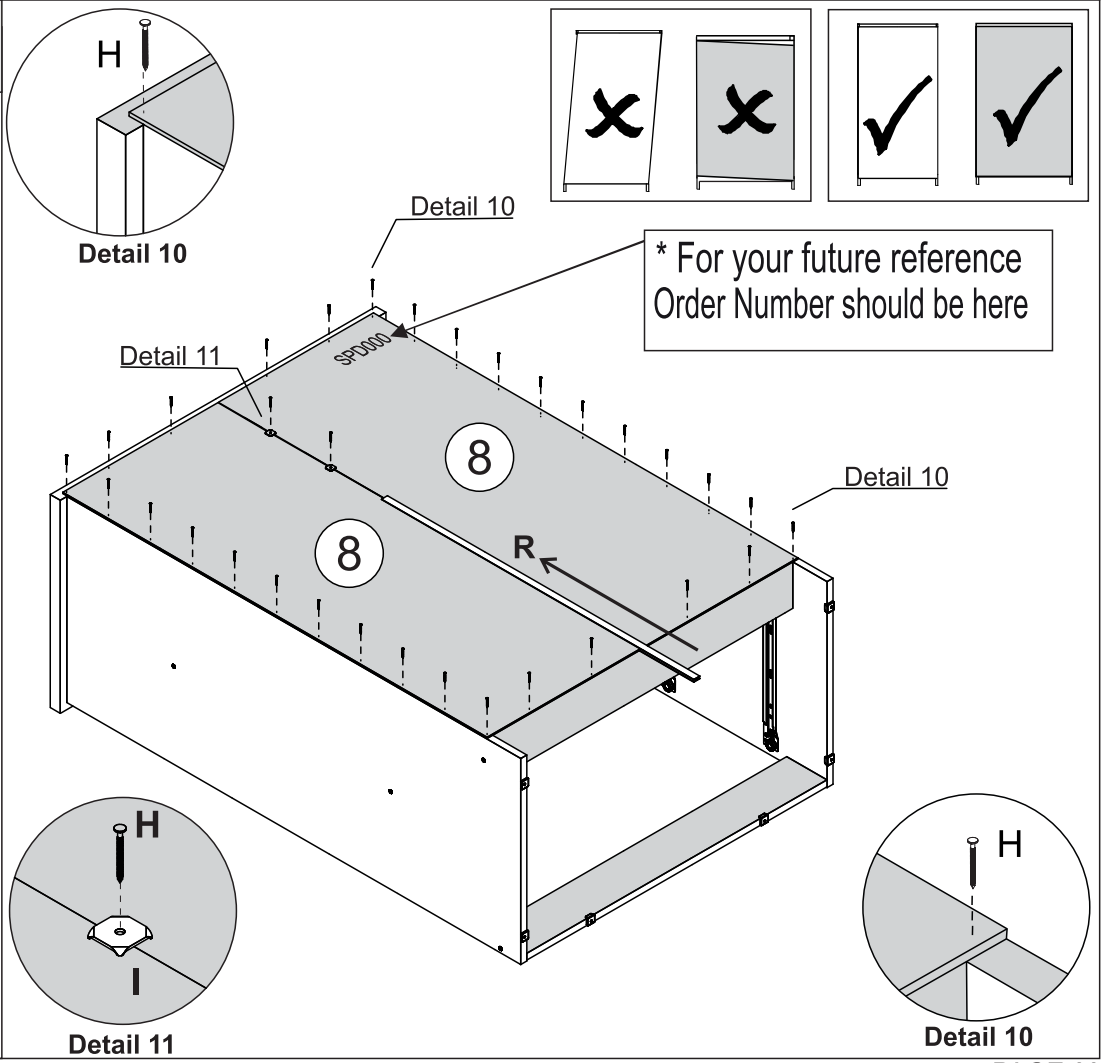

STEP 13

PARTS REQUIRED

9 - DRAWER SIDE	x10
10 - LARGE DRAWER BACK PANEL	x3
13 - DRAWER BOTTOM SUPPORT BAR	x3
14 - SMALL DRAWER BACK PANEL	x2

HARDWARE REQUIRED

G	Ø6 x 30	46
P	GLUE	01

TOOLS REQUIRED

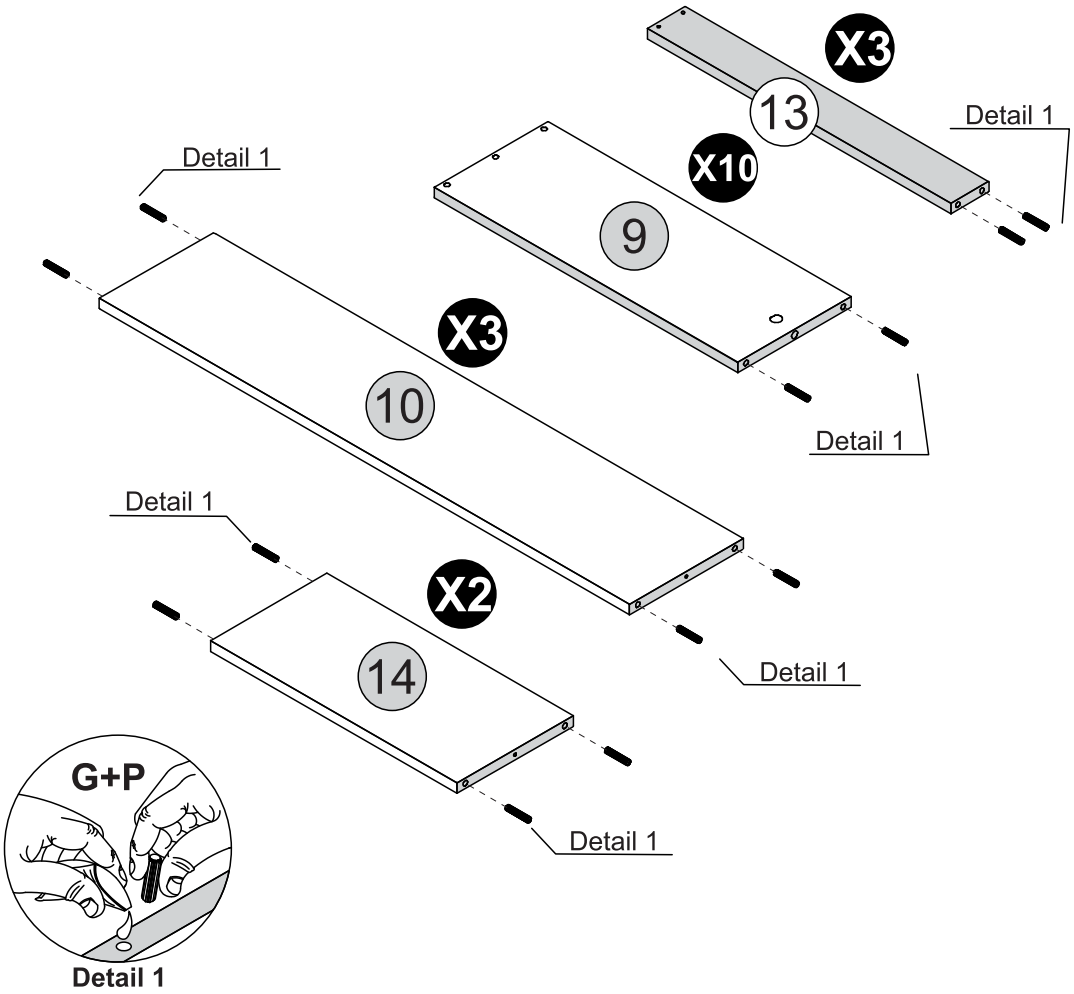

STEP 14

PARTS REQUIRED

11 - LARGE DRAWER FRONT	x3
15 - SMALL DRAWER FRONT	x2

HARDWARE REQUIRED

N		10

TOOLS REQUIRED

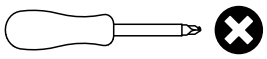

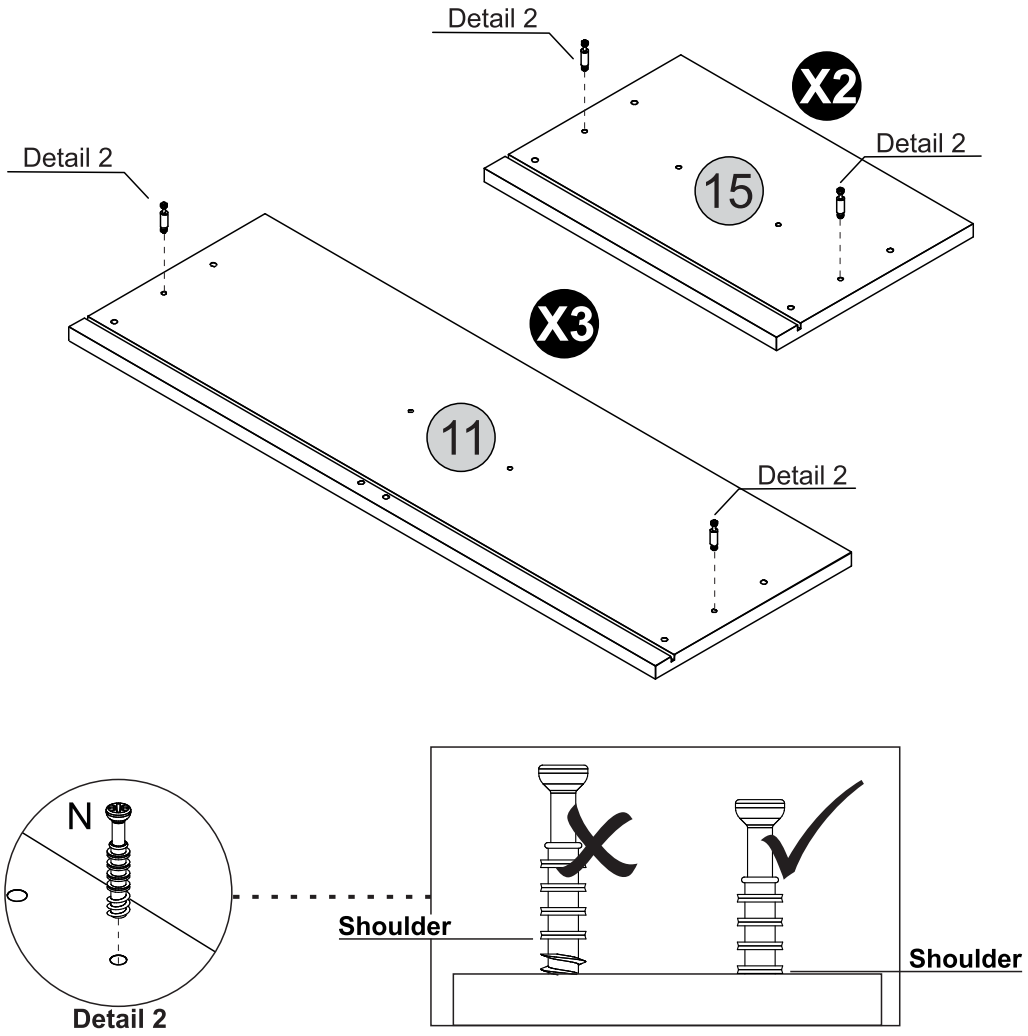

STEP 15

PARTS REQUIRED

9 - DRAWER SIDE	x6
10 - LARGE DRAWER BACK PANEL	x3

HARDWARE REQUIRED

F	Ø4 x 50	06

TOOLS REQUIRED

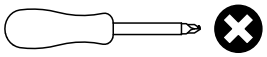

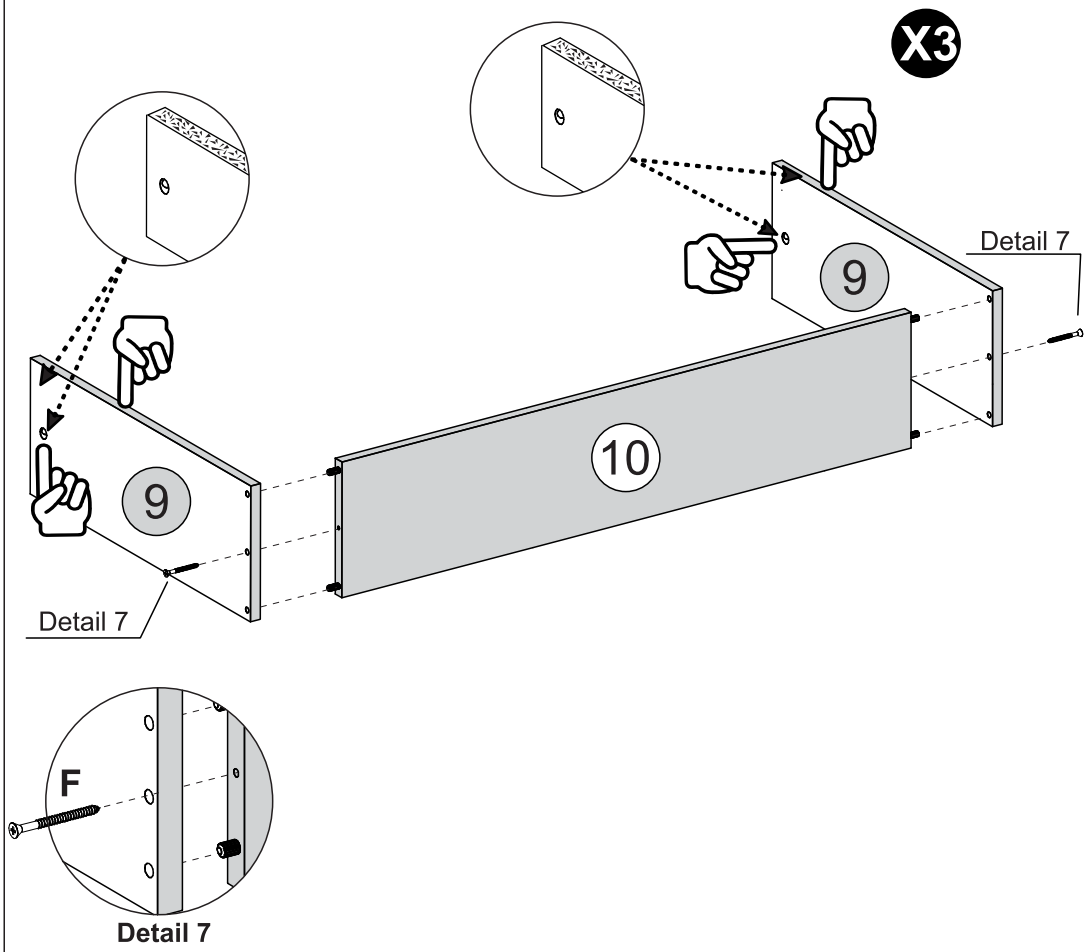

STEP 16

PARTS REQUIRED

11 - LARGE DRAWER FRONT	x3

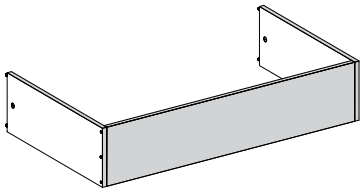

HARDWARE REQUIRED

J		06
P	GLUE	01

TOOLS REQUIRED

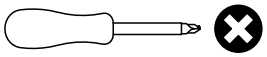

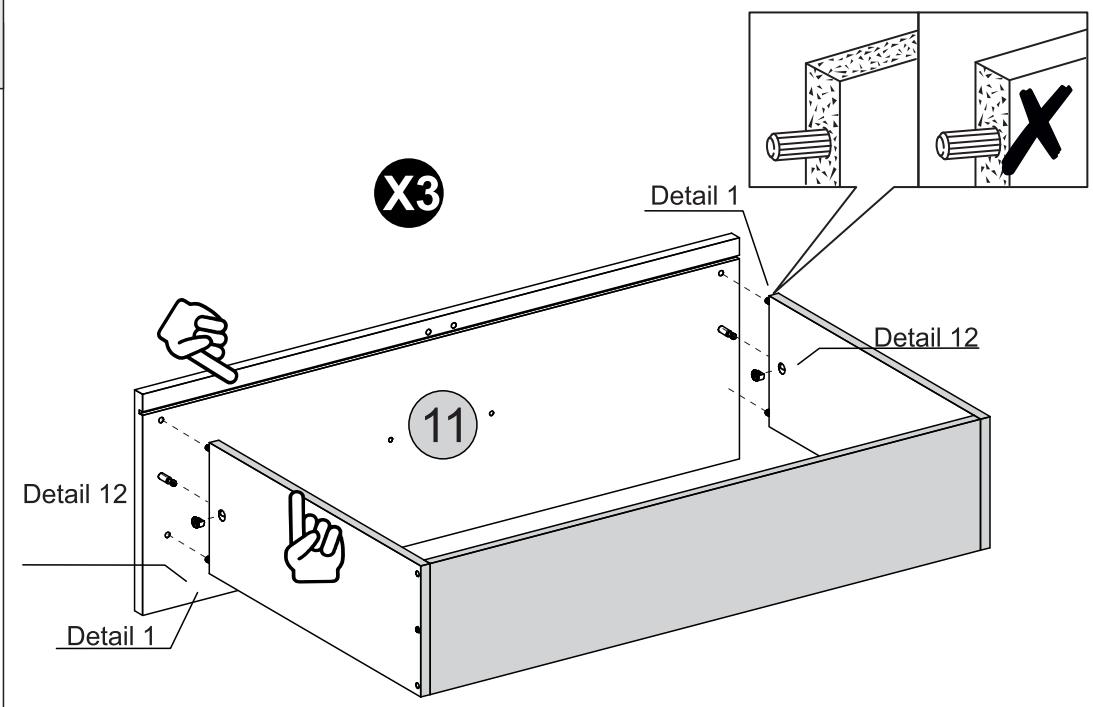

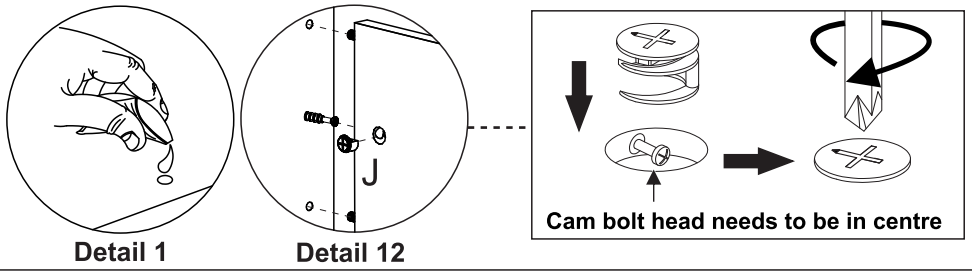

STEP 17

PARTS REQUIRED

12 -LARGE DRAWER BOTTOM x3

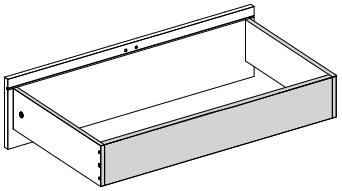

HARDWARE REQUIRED

H	10 x 10	12

TOOLS REQUIRED

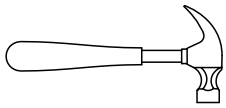

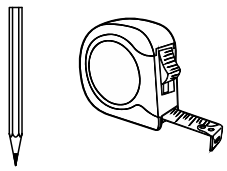

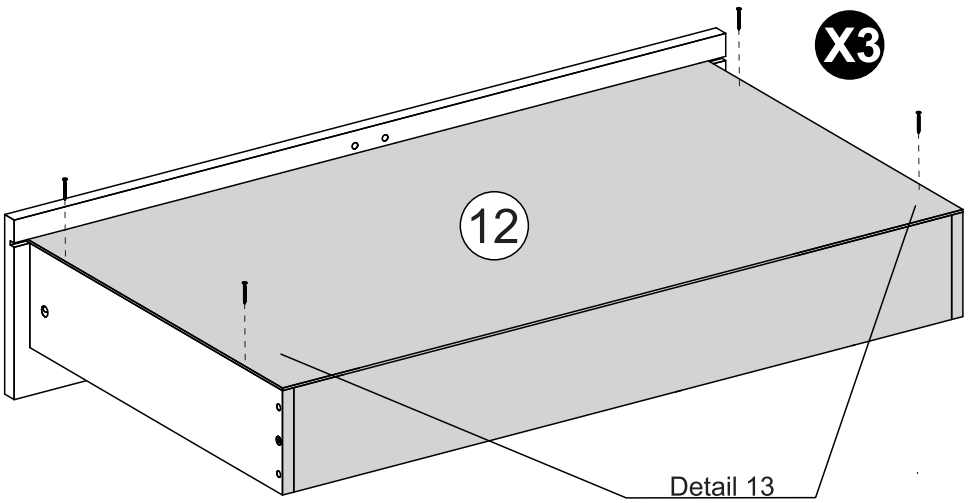

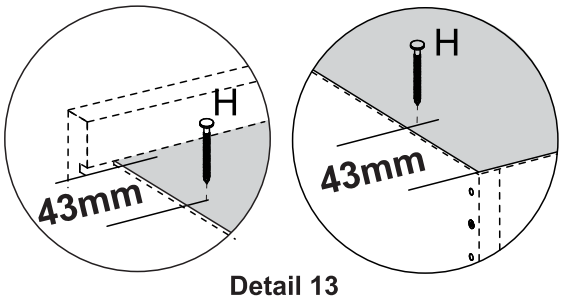

Detail 13

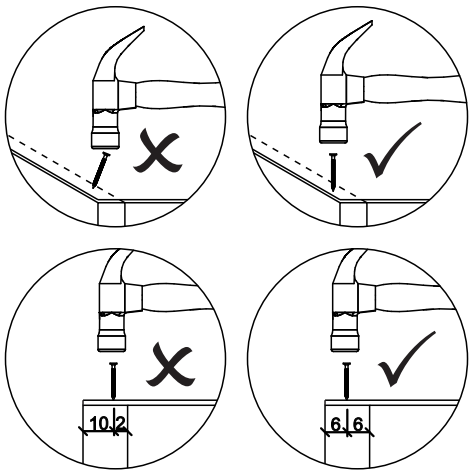

STEP 18

PARTS REQUIRED

13 -DRAWER BOTTOM SUPPORT BAR x3

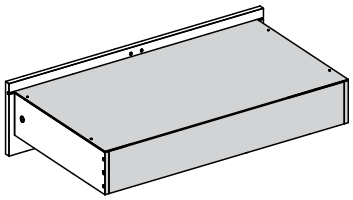

HARDWARE REQUIRED

H	10 x 10	18
P	GLUE	01

TOOLS REQUIRED

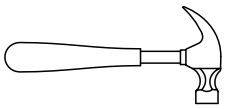

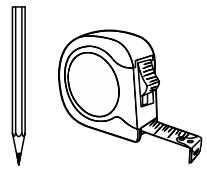

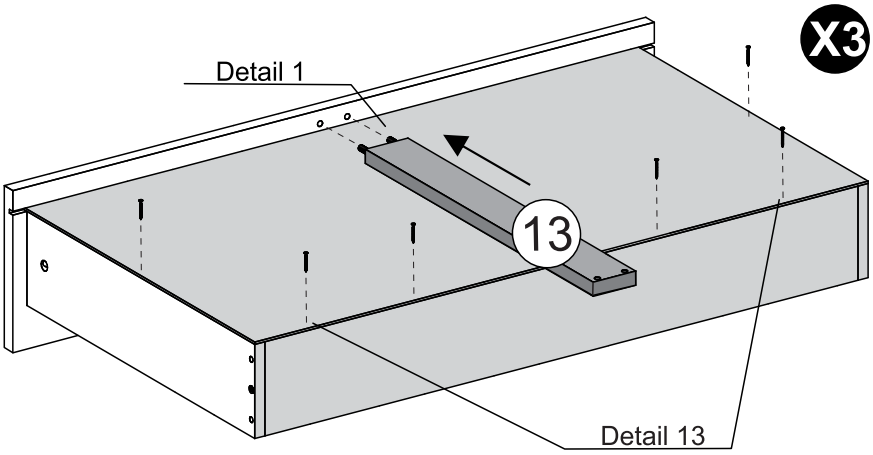

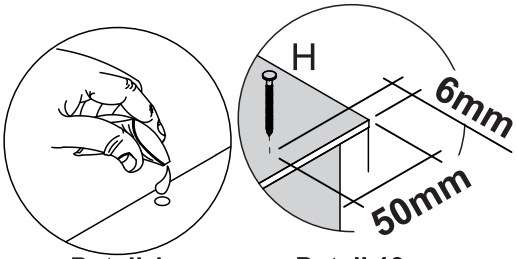

Detail 1 Detail 13

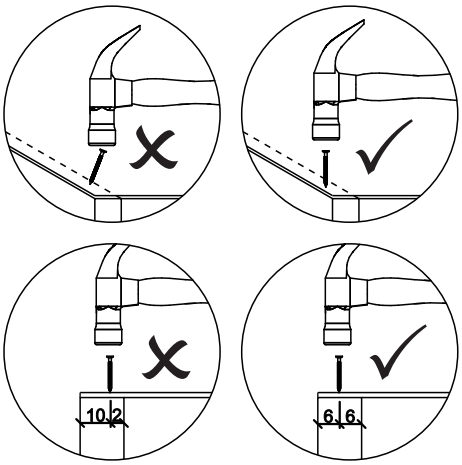

STEP 19

PARTS REQUIRED

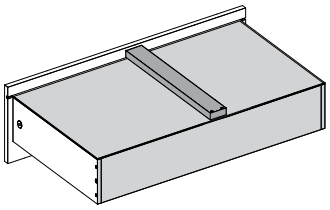

HARDWARE REQUIRED

C	Ø4,0 x 14mm	12
E	Ø3,5 x 40mm	06
Q	LEFT	03
Q	RIGHT	03

TOOLS REQUIRED

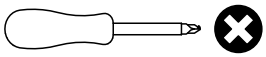

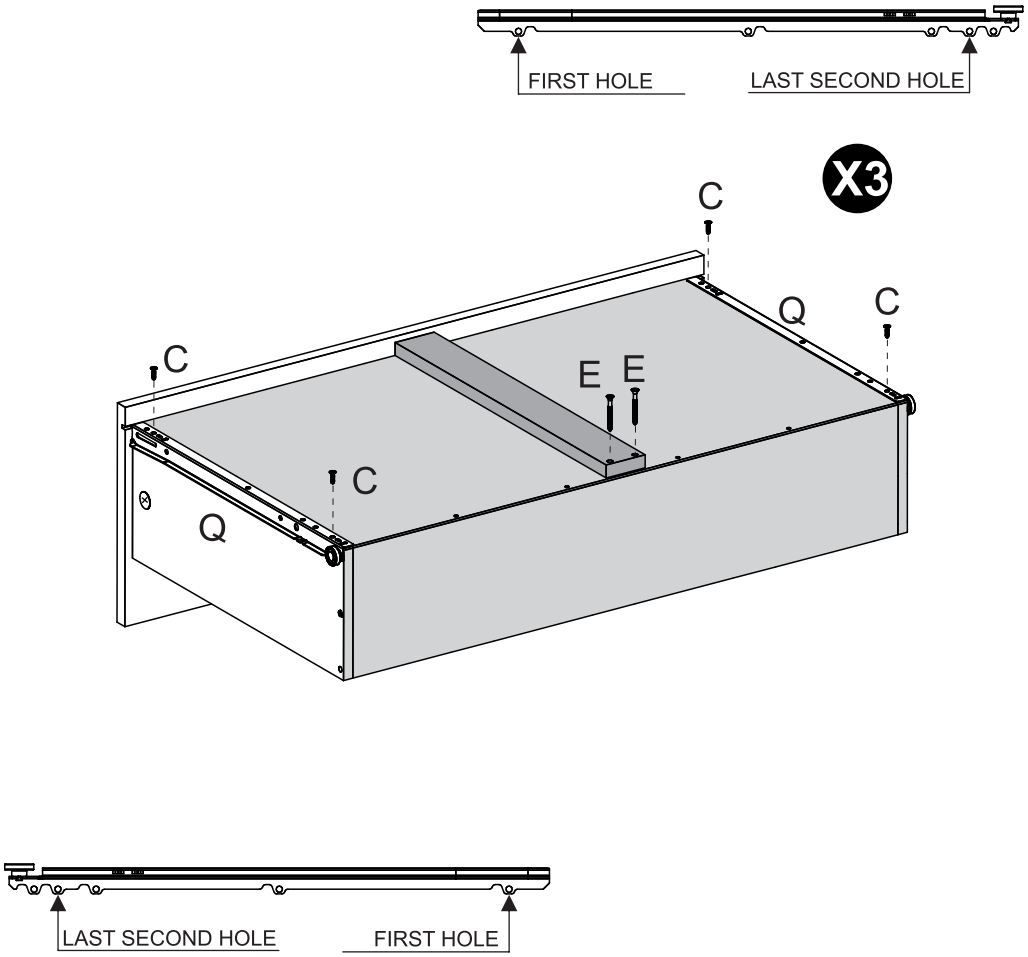

STEP 20

PARTS REQUIRED

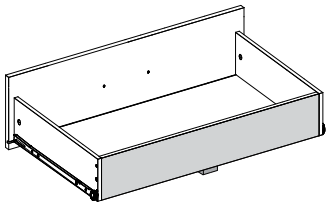

HARDWARE REQUIRED

D	4 x 20	06
T		03
V		06

TOOLS REQUIRED

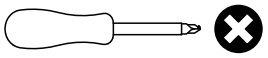

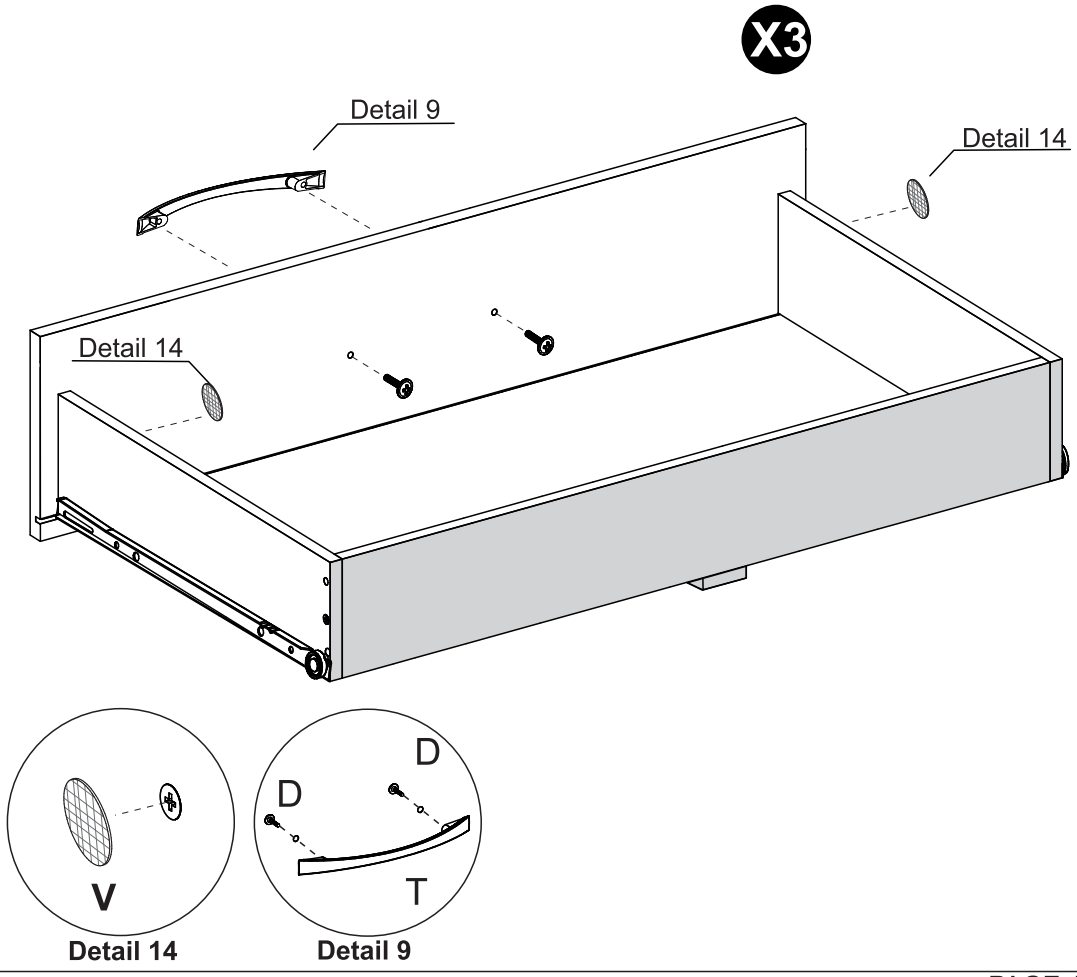

STEP 21

PARTS REQUIRED

9 - DRAWER SIDE	x6
14 - DRAWER BACK PANEL	x3

HARDWARE REQUIRED

F	Ø4 x 50	04

TOOLS REQUIRED

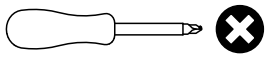

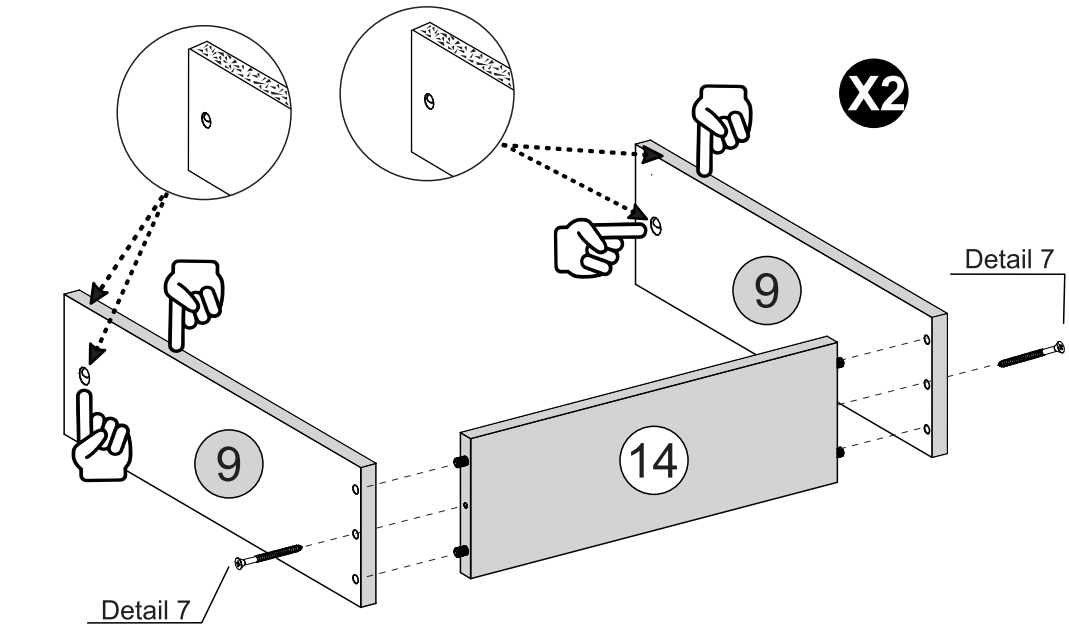

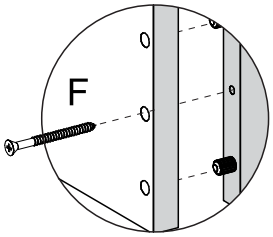

Detail 7

STEP 22

PARTS REQUIRED

15 - SMALL DRAWER FRONT	x3

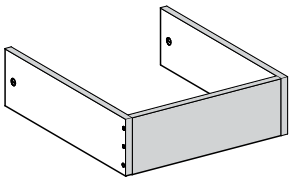

HARDWARE REQUIRED

J		04
P	GLUE	01

TOOLS REQUIRED

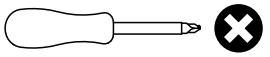

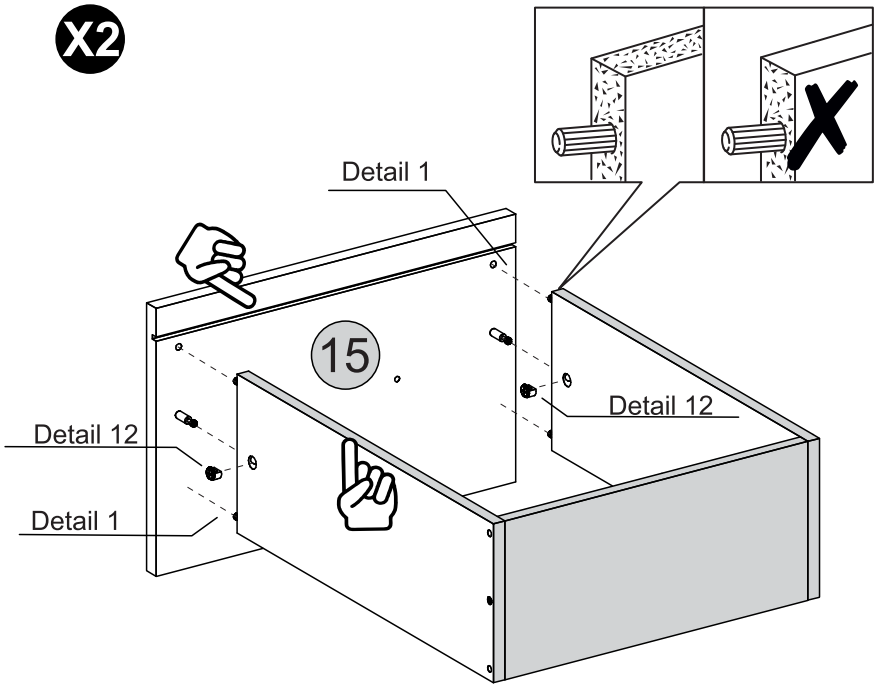

Detail 1

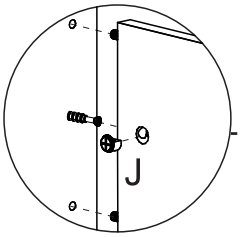

Detail 12

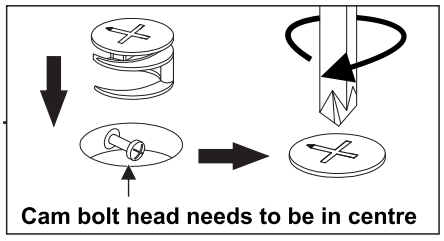

Cam bolt head needs to be in centre

STEP 23

PARTS REQUIRED

16 -DRAWER BOTTOM	x2

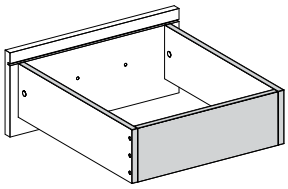

HARDWARE REQUIRED

H	10 x 10	08

TOOLS REQUIRED

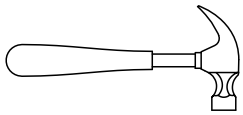

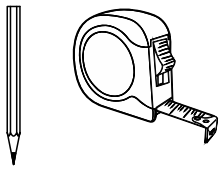

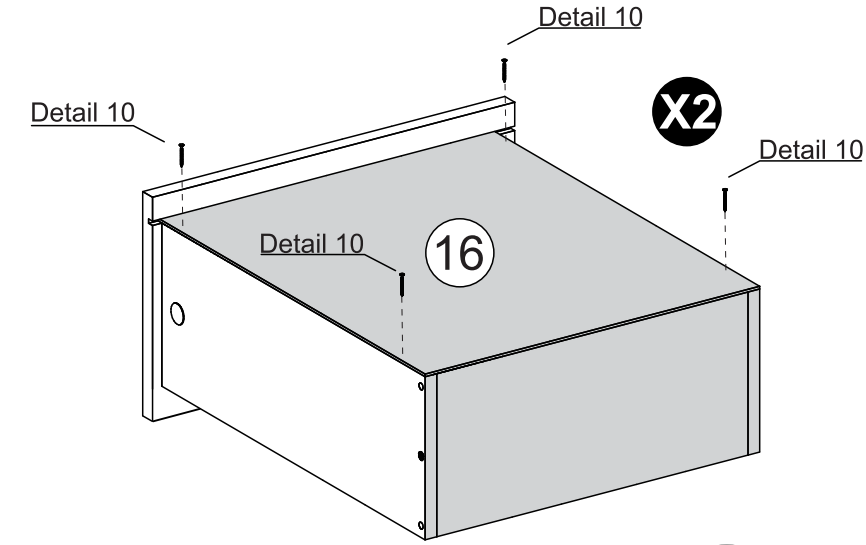

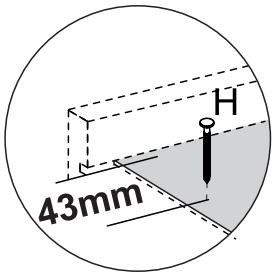

Detail 10

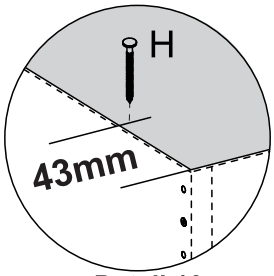

Detail 10

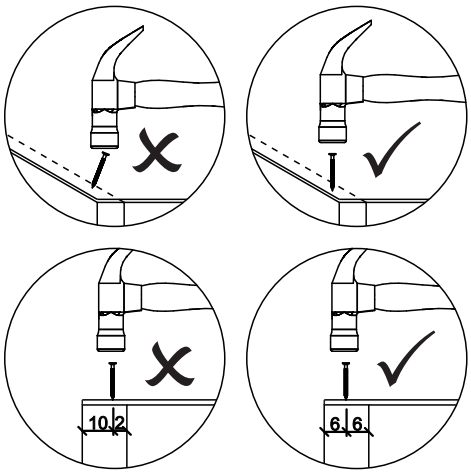

STEP 24

PARTS REQUIRED

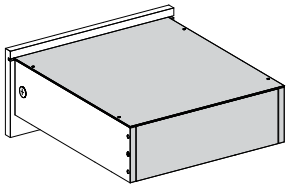

HARDWARE REQUIRED

H	10 x 10	08

TOOLS REQUIRED

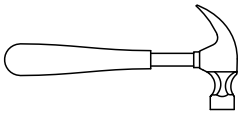

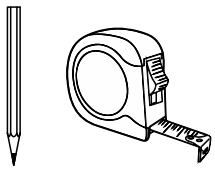

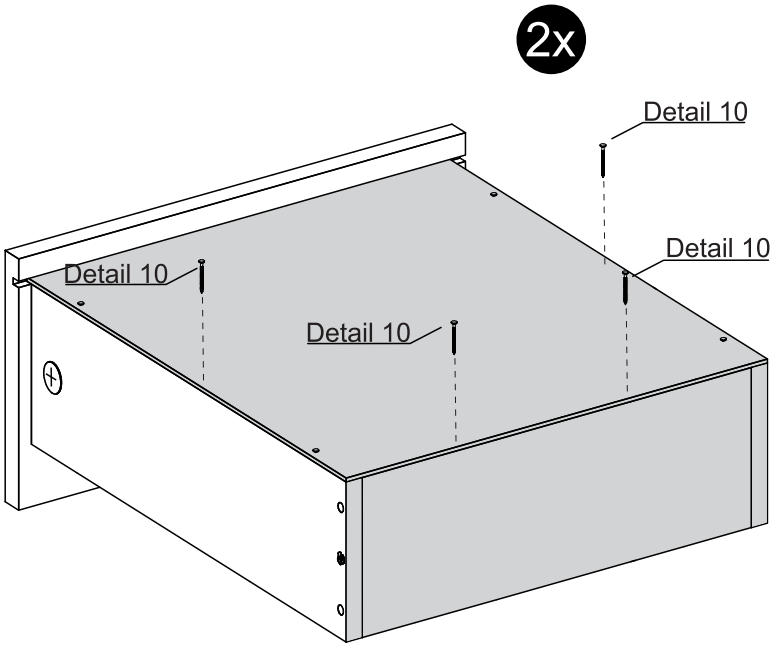

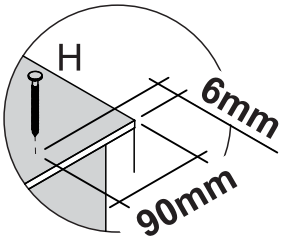

Detail 10

STEP 25

PARTS REQUIRED

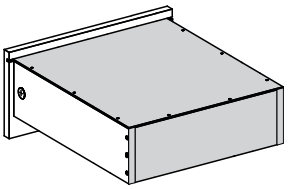

HARDWARE REQUIRED

C	Ø4,0 x 14mm	08
Q	LEFT	02
Q	RIGHT	02

TOOLS REQUIRED

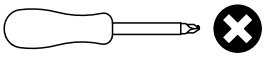

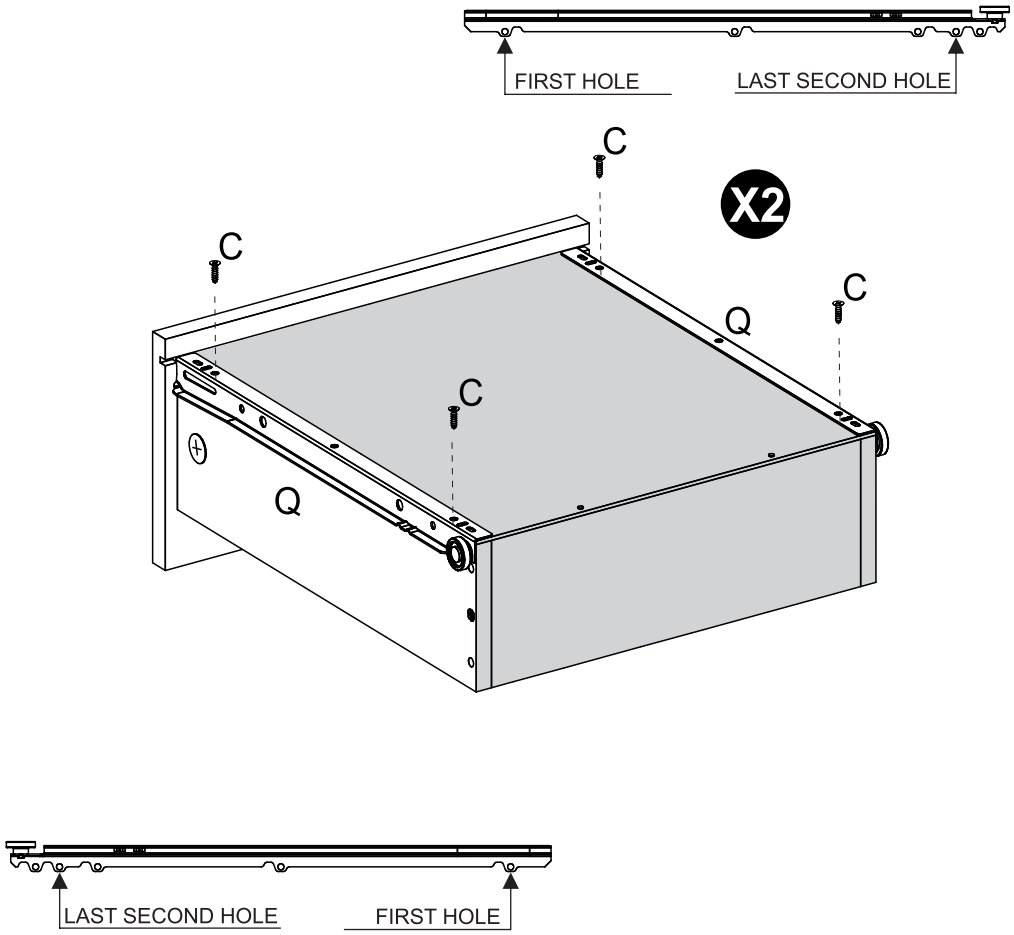

STEP 26

PARTS REQUIRED

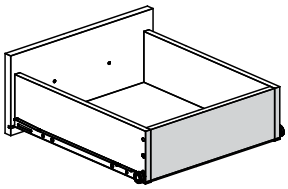

HARDWARE REQUIRED

D	4 x 20	04
V		04
T		02

TOOLS REQUIRED

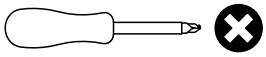

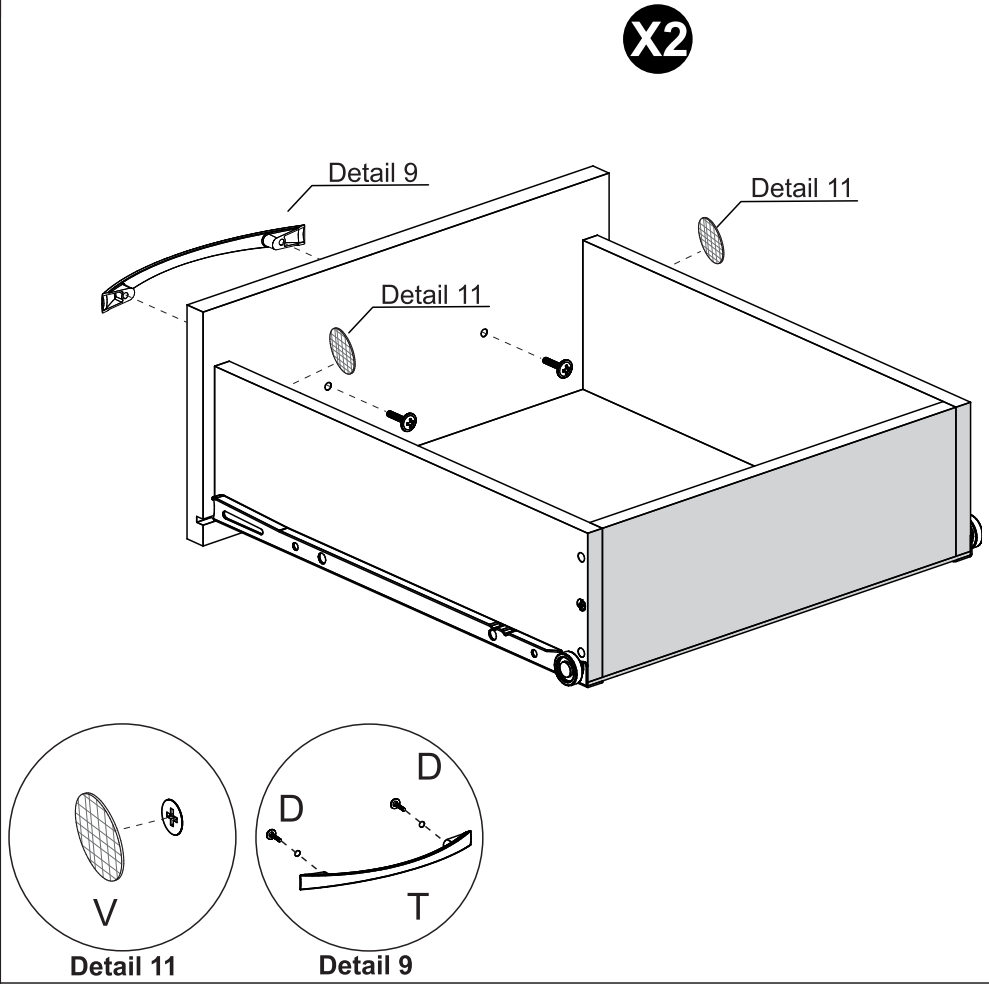

STEP 27

PARTS REQUIRED

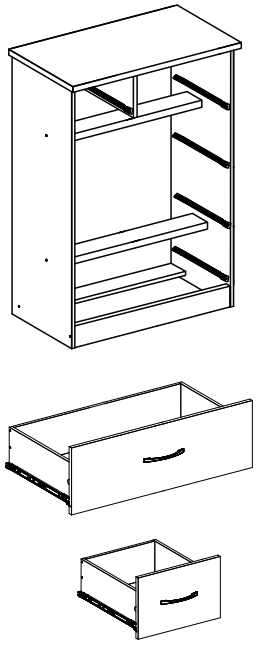

HARDWARE REQUIRED

O		08

TOOLS REQUIRED

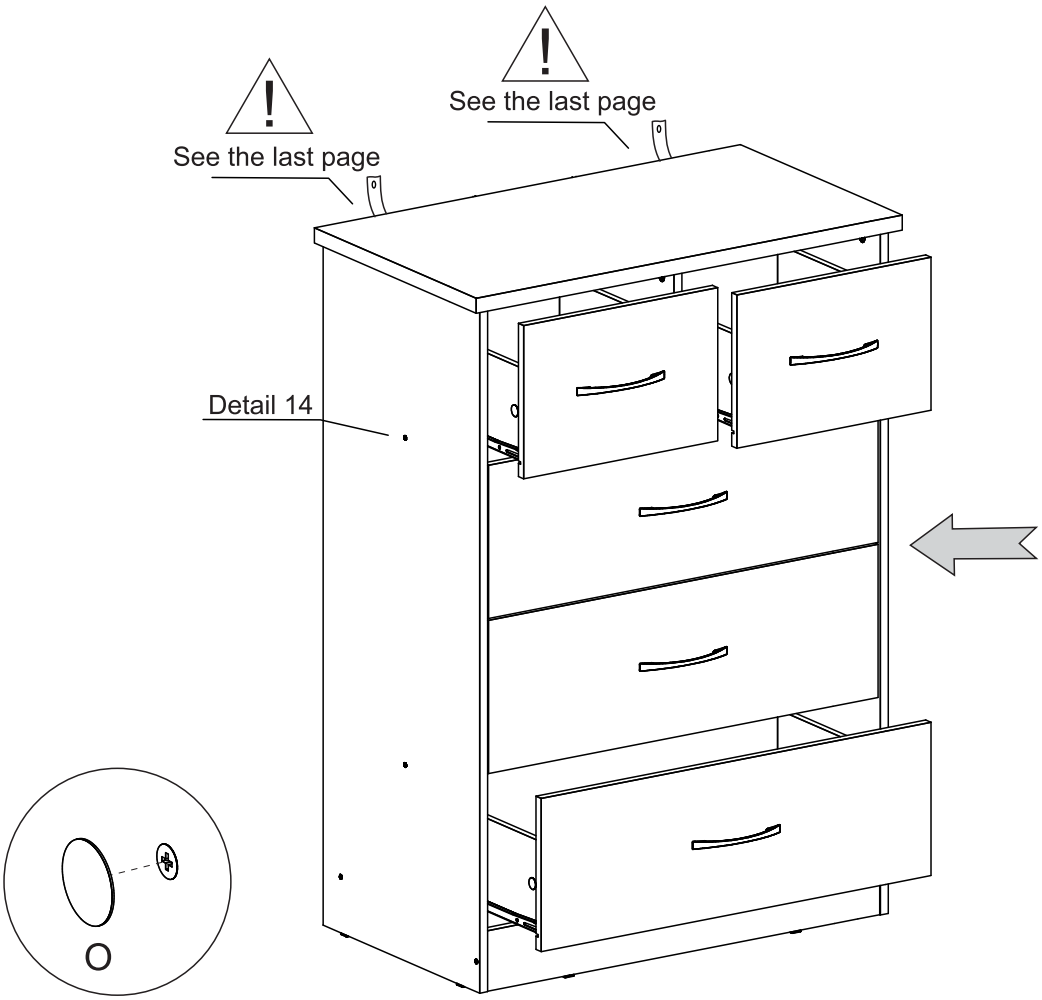

Detail 14

STEP 28

PARTS REQUIRED

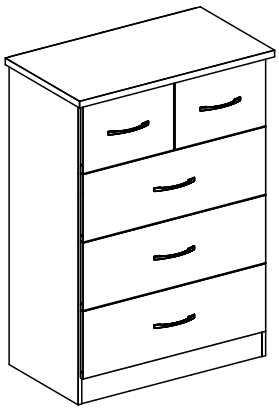

HARDWARE REQUIRED

C	Ø4,0 x 14mm	10

TOOLS REQUIRED

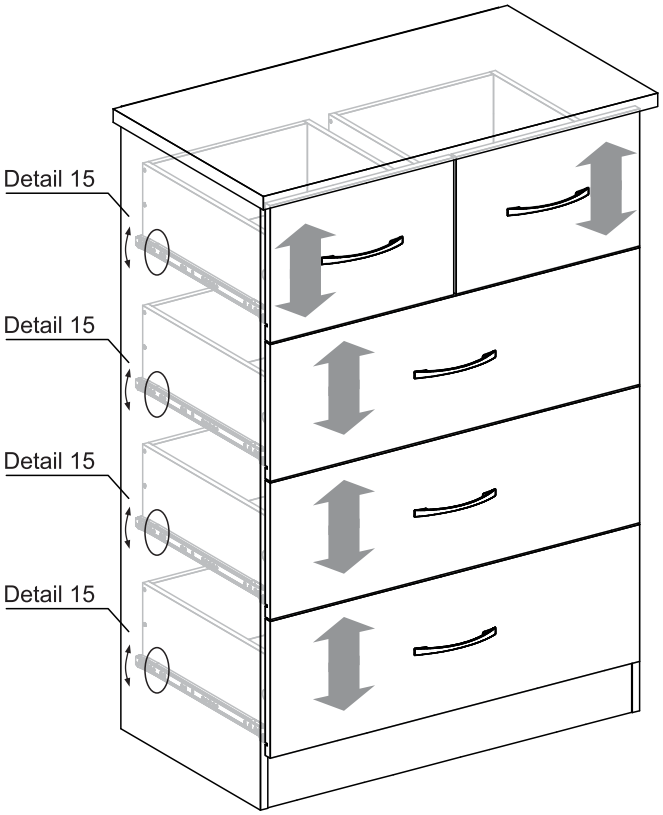

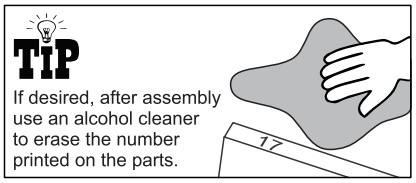

Drawer Adjustment

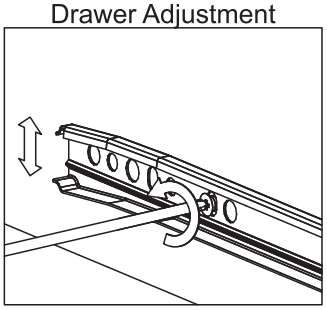

Drawer Lock

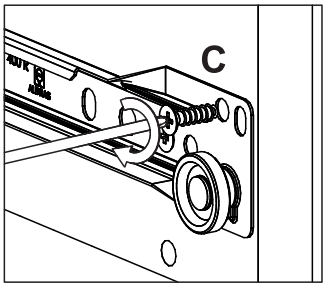

Detail 15

WARNING

Serious or fatal injuries can occur from furniture tipping over. To prevent the furniture from tipping over we recommend that it is permanently fixed to the wall.

Wall fixings are not supplied with this product as different wall materials require different types of fixing devices.
Please make sure you use fixings suitable for the walls in your home.

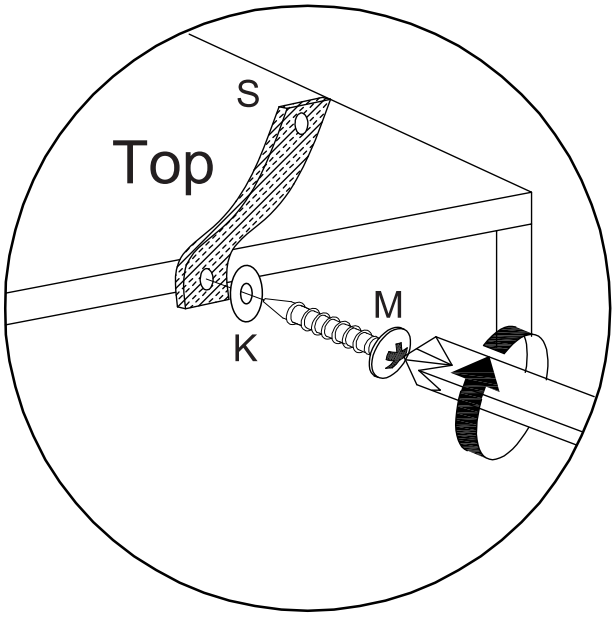

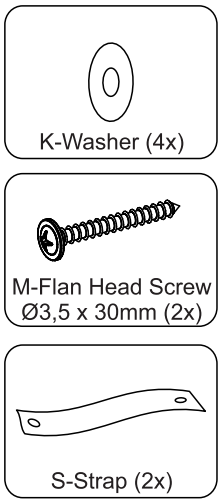

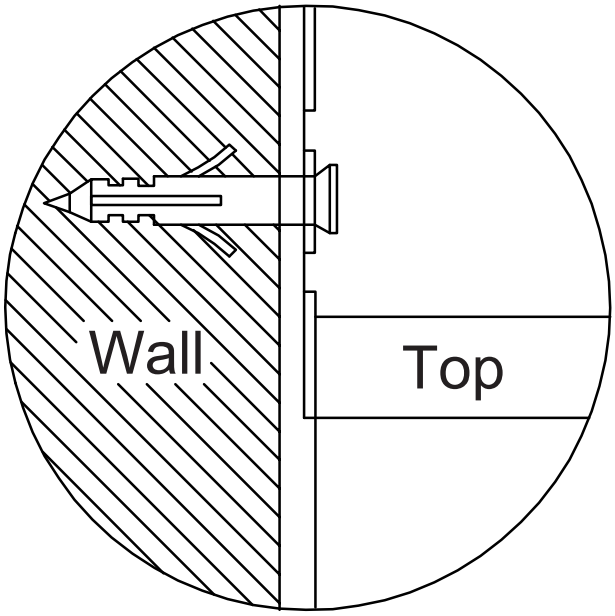

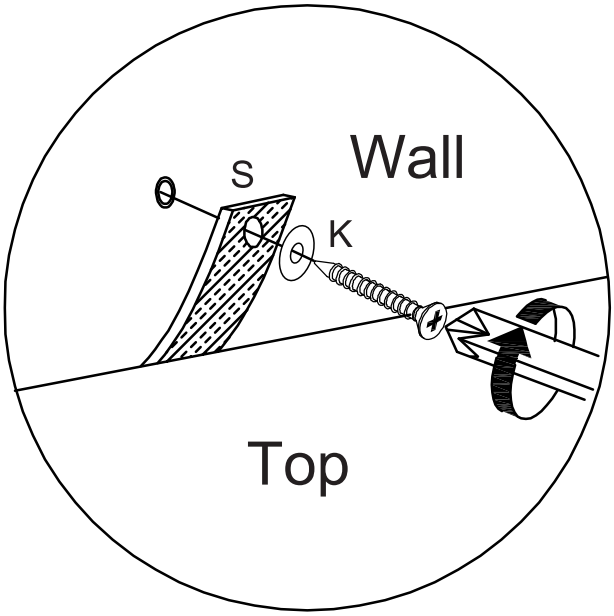

NEVADA 3 DRAWER BEDSIDE ASSEMBLY INSTRUCTIONS

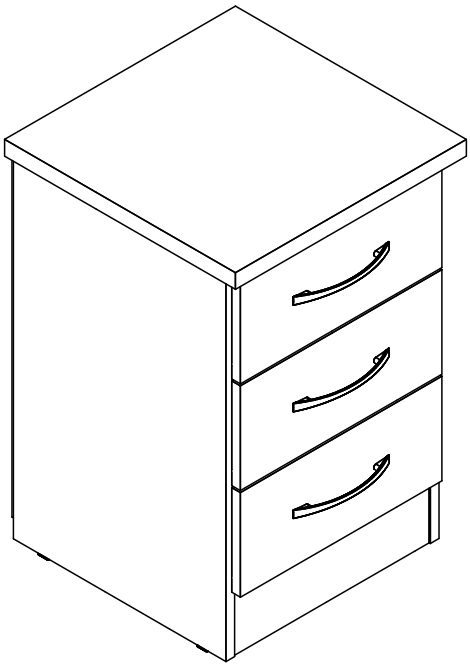

IMPORTANT

FOR DOMESTIC USE ONLY

PLEASE READ BEFORE YOU CONTINUE FURTHER

CARE AND MAINTENANCE

After unpacking this product please keep the original packaging in case it needs to be returned for any reason.

- Please ensure all fittings and parts are present before commencing with assembly.
- Never drag or push products as this could cause damage to the joints making it inferior.
- We strongly recommend that you keep children away from your work area.
- We recommend that you lay a blanket or sheet on the floor to avoid damage to both your floor and the product.
- Assemble this product as close to its final position as possible.
- Do not place this product next to a radiator or in direct sunlight.
- Do not drag or push items across your high gloss furniture as this may cause the surface to scratch
- Wood is a natural product and may expand if subjected to damp and may shrink or crack if subjected to heat. Therefore it is recommended that room temperature is maintained, with no sudden temperature fluctuations.
- Make sure any spillage is wiped off immediately.
- Do not place hot or chilled items directly on to the surface, use a place mat or marking will occur.
- For general cleaning use a soft cotton or micro fibre cloth, and do not use detergents of any kind.
- From time to time it may be necessary to tighten fittings, regular inspections should be carried out.
- Do not place on a wet or damp floor as staining may occur to your floor.

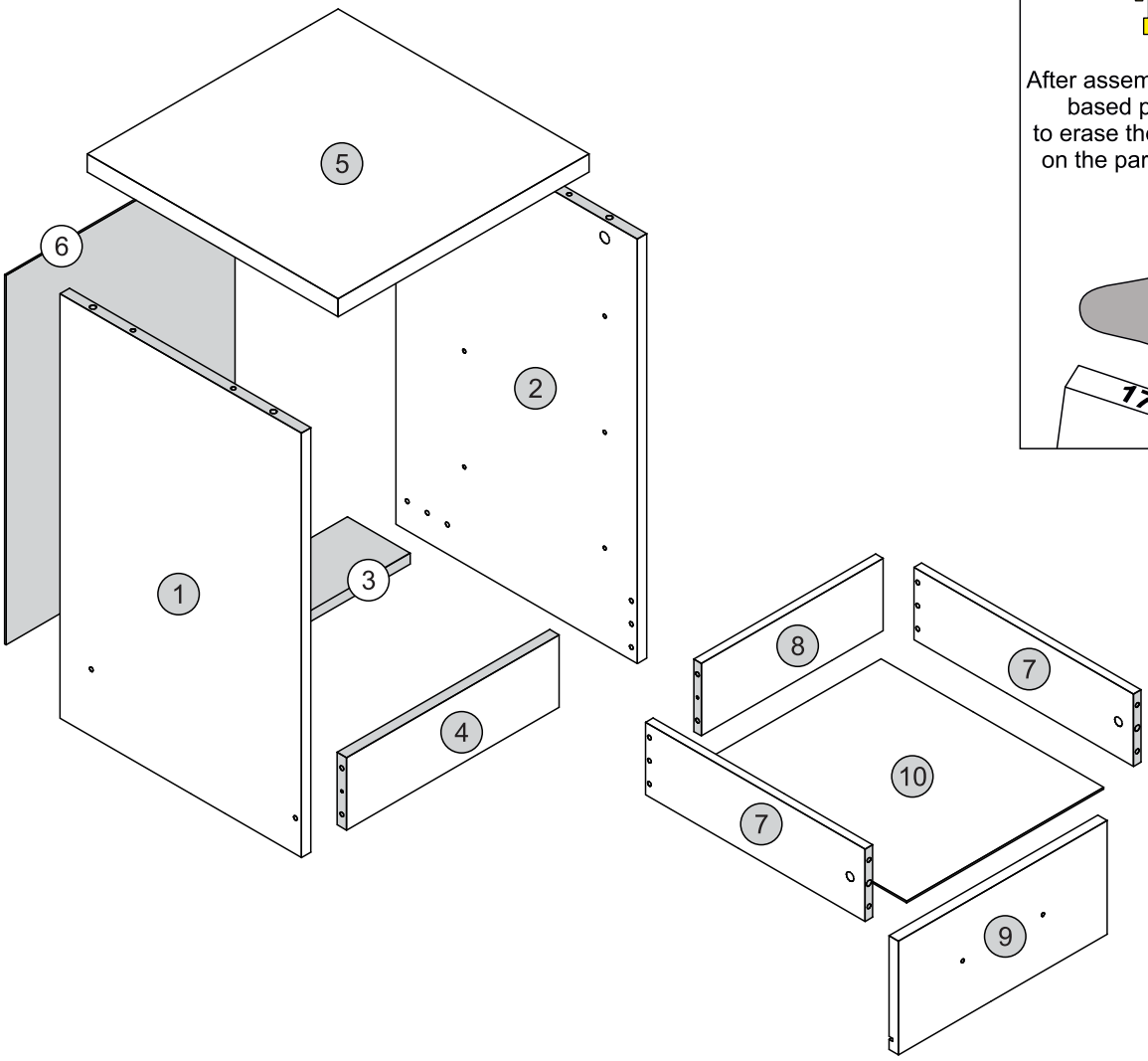

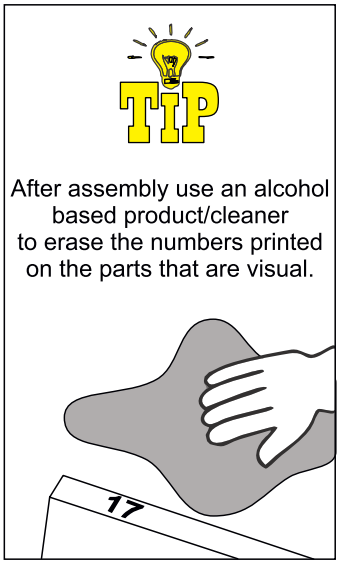

PARTS LIST

Please Note:
The below parts have all been stamped with the part number to help identify them during assembly.

Part Number	Part Description	Quantity	Carton
01	Left Side Panel	1	1/1
02	Right Side Panel	1	1/1
03	Back Baseboard	1	1/1
04	Front Baseboard	1	1/1
05	Top Panel	1	1/1
06	Back Panel	1	1/1
07	Drawer Side	6	1/1
08	Drawer Back Panel	3	1/1
09	Drawer Front	3	1/1
10	Drawer Bottom	3	1/1

TOOLS REQUIRED

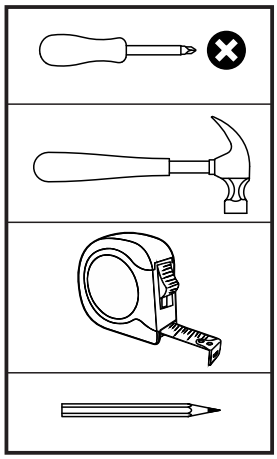

FITTINGS LIST

A 1/+ Flat Head Screw Ø6,0 x 10mm (12x)	**B** 2/+ Flat Head Screw Ø4,0 x 14mm (18x)	**C** 1/+ Flan Head Screw Ø4,0 x 20mm (6x)	**D** 2/+ Flat Head Screw Ø4,0 x 50mm (10x)
E 2/+ Dowel Ø6,0 x 30mm (36x)	**F** 2/+ Nail 10 x 10 (42x)	**G** 2/+ Cam Bolt (10x)	**H** 1/+ Cam Nut Ø12mm (6x)
I 1/+ Plastic Foot (4x)	**J** 2/+ Hole Plugs (4x)	**K** GLUE Glue (1x)	**L** Handle (3x)
M Drawer Runners (3x)	**N** 1/+ Cam Nut Ø15mm (4x)	**O** Strap (1x)	**P** 1/+ Flan Head Screw Ø3,5 x 30mm (1x)
Q 1/+ Washer (2x)	**R** 2/+ Hole Plugs (6x)		

TIPS FOR FITTINGS CAM-LOCKS

WHEN FITTING CAM NUT. ENSURE STARTING POSITION IS CORRECT BEFORE YOU INSERT CONNECTING CAM BOLT TURN CLOCKWISE UNTIL SECURE

CORRECT WRONG

Cam bolt head needs to be in centre

CAMBOLT

Tighten until shoulder in flush with panel. Do not overtighten or undertighten (see example beside)

Shoulder

Panel **Panel**

STEP 1

PARTS REQUIRED

1 - LEFT SIDE PANEL	x1

HARDWARE REQUIRED

E	Ø6,0 x 30mm	02
F	10 x 10	02
I		02
K	GLUE	01

TOOLS REQUIRED

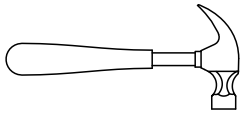

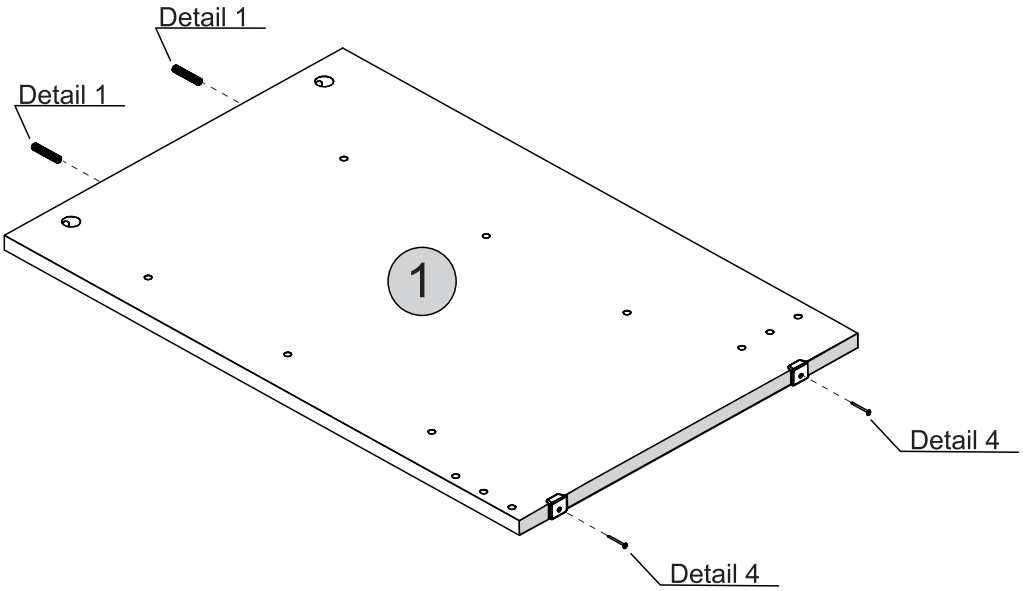

Detail 1

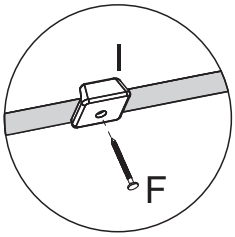

Detail 4

STEP 2

PARTS REQUIRED

2 - RIGHT SIDE PANEL	x1

HARDWARE REQUIRED

E	Ø6,0 x 30mm	02
F	10 x 10	02
I		02
K	GLUE	01

TOOLS REQUIRED

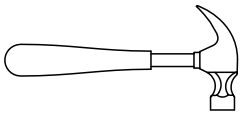

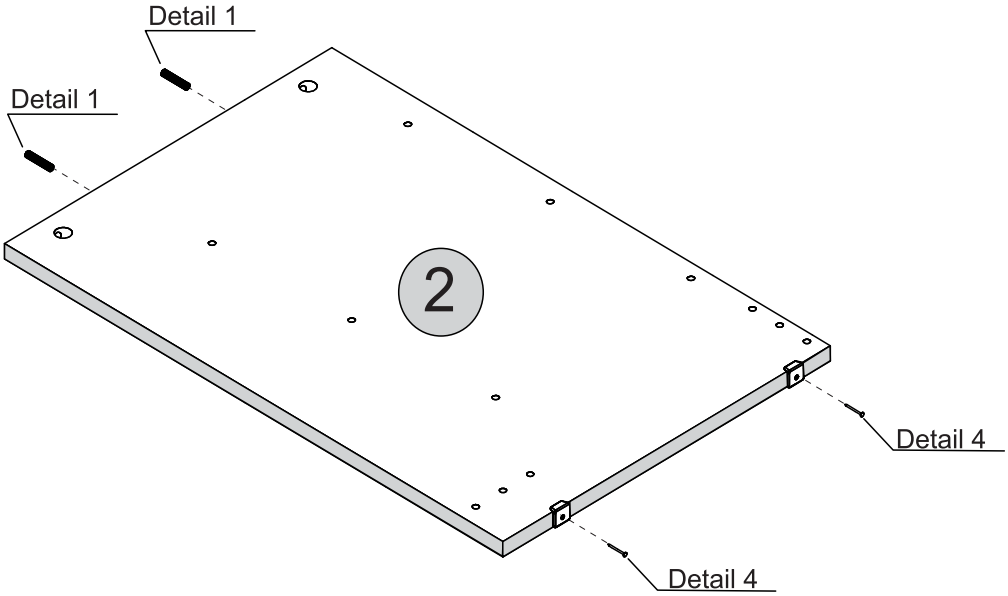

Detail 1

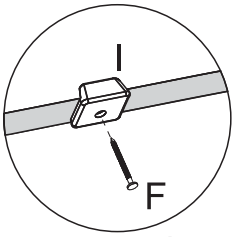

Detail 4

STEP 3

PARTS REQUIRED

2 - RIGHT SIDE PANEL	x1

HARDWARE REQUIRED

A	Ø6,0 x 10mm	06
B	Ø4,0 x 14mm	03
M	RIGHT	03

TOOLS REQUIRED

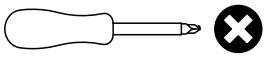

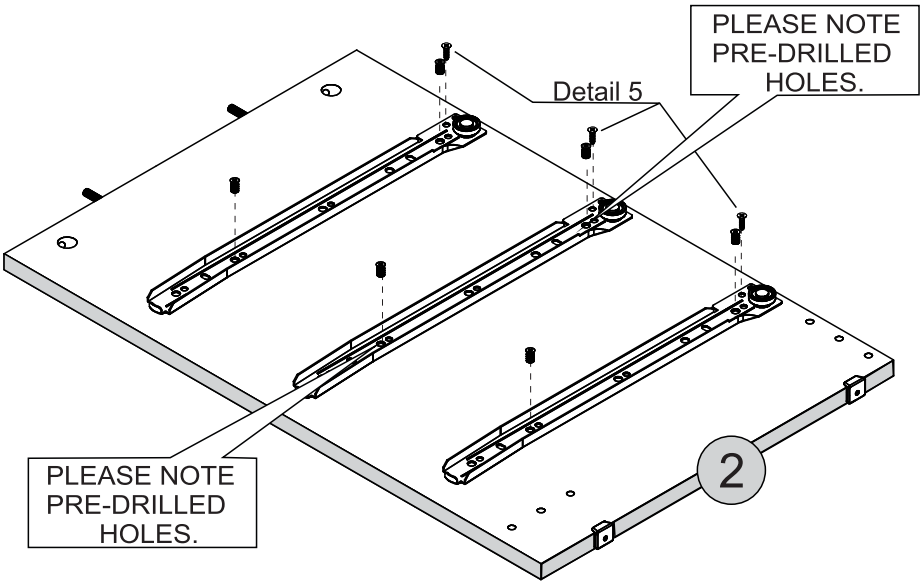

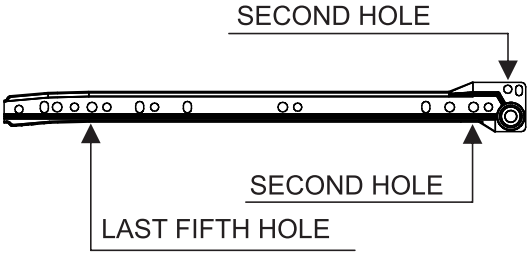

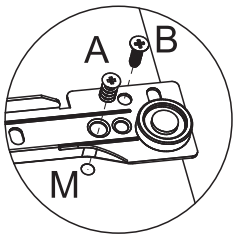

Detail 5

STEP 4

PARTS REQUIRED

1 - LEFT SIDE PANEL	x1

HARDWARE REQUIRED

A	Ø6,0 x 10mm	06
B	Ø4,0 x 14mm	03
M	LEFT	03

TOOLS REQUIRED

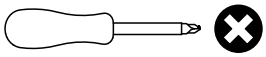

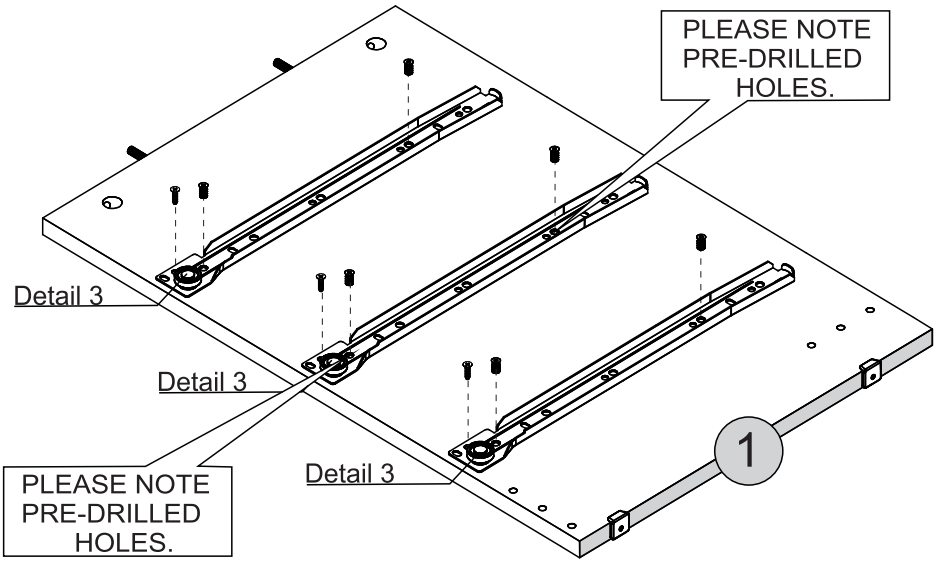

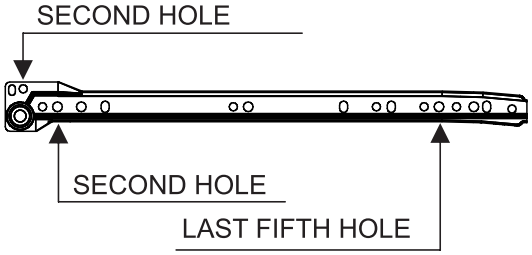

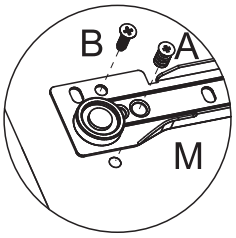

Detail 3

STEP 5

PARTS REQUIRED

3 -	BACK BASEBOARD	x1
4 -	FRONT BASEBOARD	x1

HARDWARE REQUIRED

E	Ø6,0 x 30mm	08
K	GLUE	01

TOOLS REQUIRED

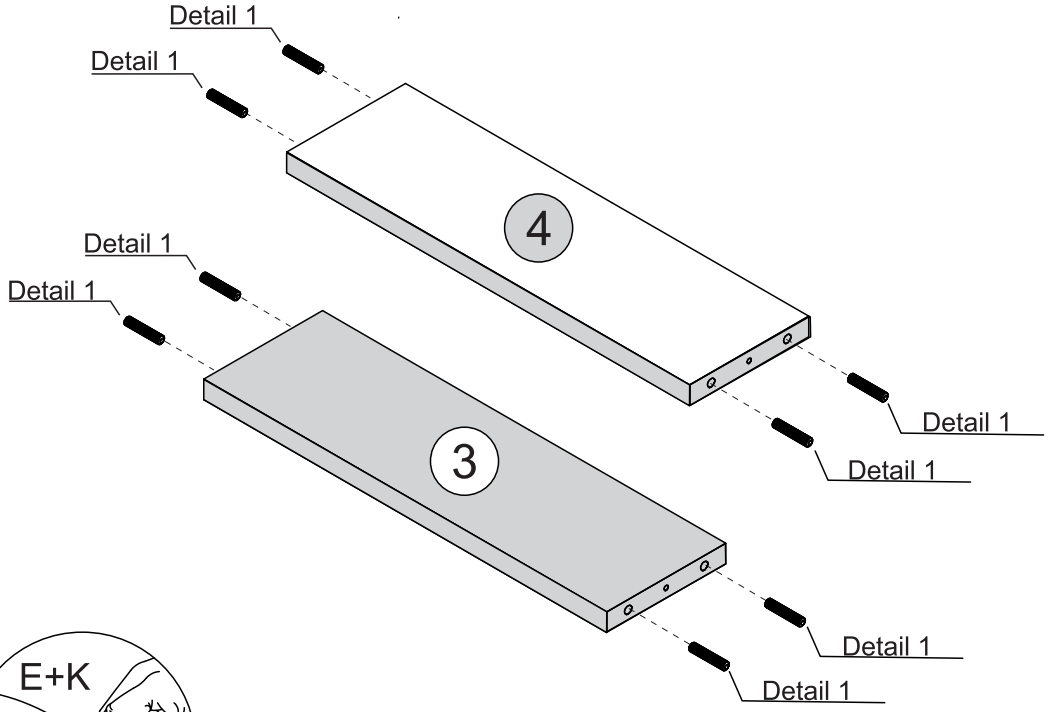

Detail 1

STEP 6

PARTS REQUIRED

2 -	RIGHT SIDE PANEL	x1
3 -	BACK BASEBOARD	x1
4 -	FRONT BASEBOARD	x1

HARDWARE REQUIRED

D	Ø4 x 50mm	02
K	GLUE	01

TOOLS REQUIRED

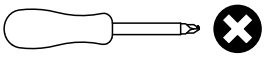

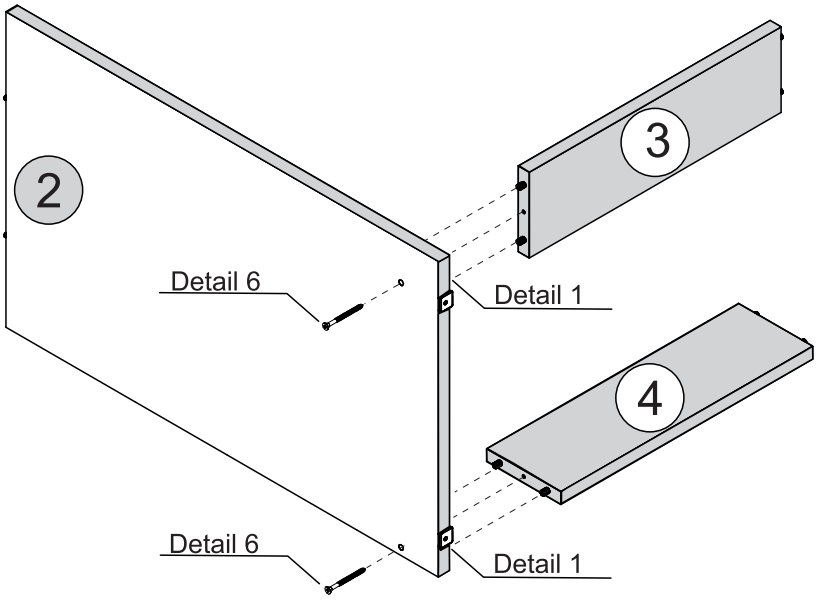

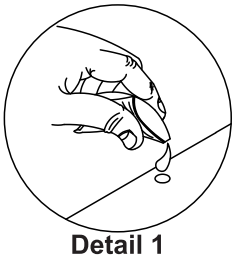

Detail 1

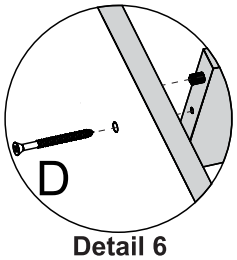

Detail 6

STEP 7

PARTS REQUIRED

1 - LEFT SIDE PANEL	x1

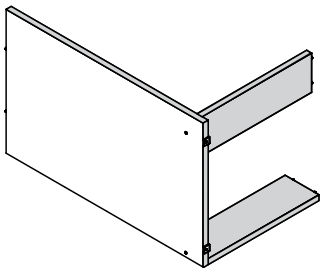

HARDWARE REQUIRED

D	Ø4 x 50mm	02
K	GLUE	01

TOOLS REQUIRED

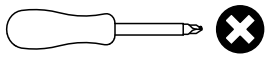

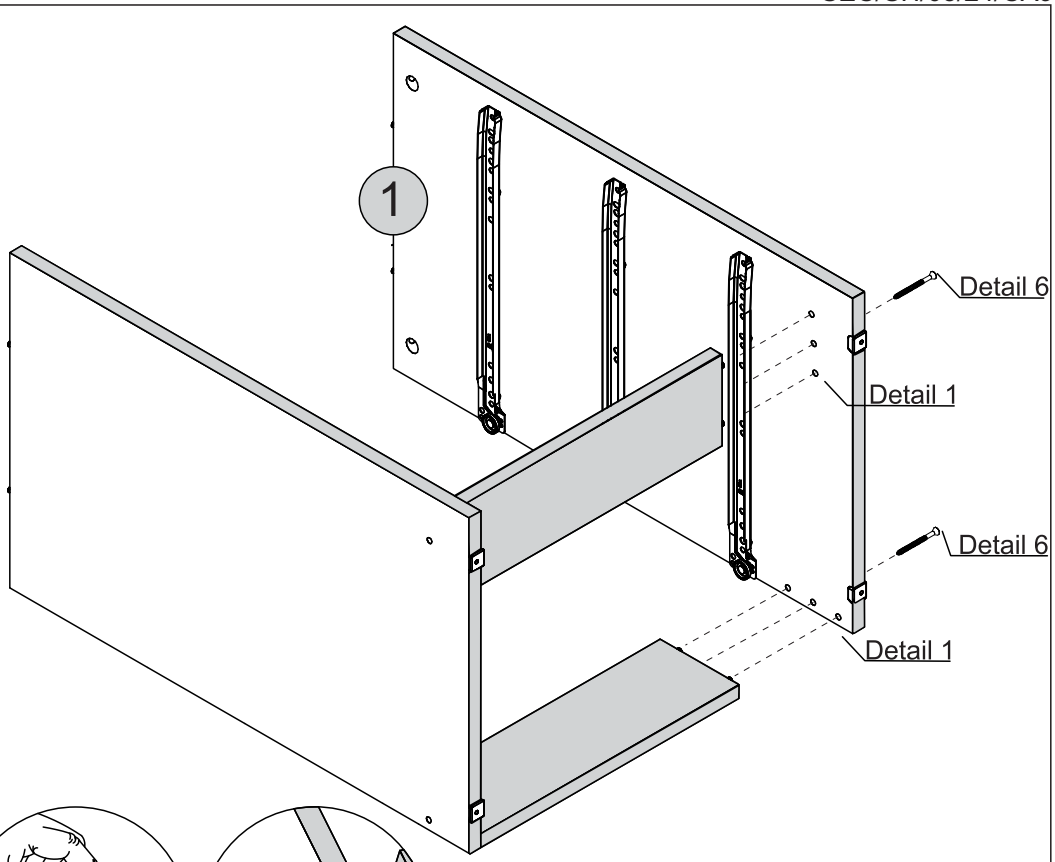

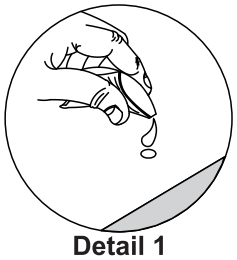

Detail 1

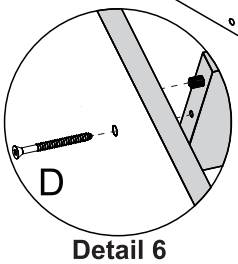

Detail 6

STEP 8

PARTS REQUIRED

5 - TOP PANEL	x1

HARDWARE REQUIRED

G		04

TOOLS REQUIRED

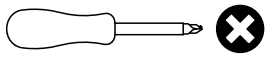

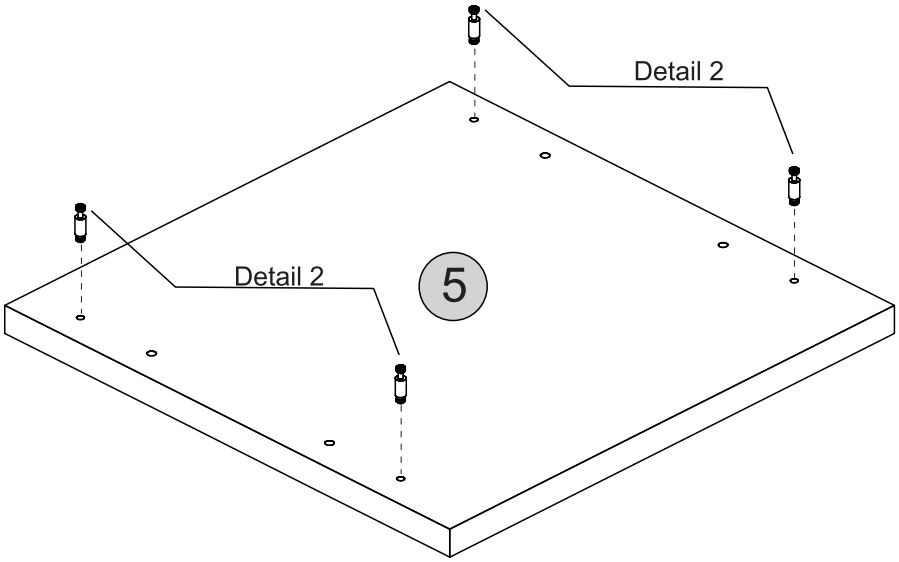

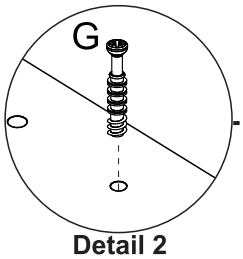

Detail 2

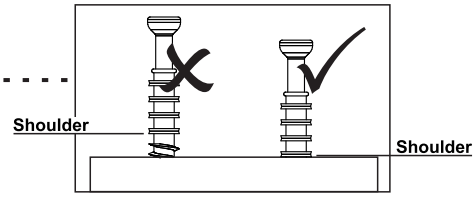

STEP 9

PARTS REQUIRED

5 - TOP PANEL	x1

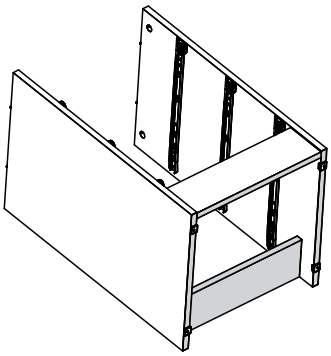

HARDWARE REQUIRED

K	GLUE	01
N		04

TOOLS REQUIRED

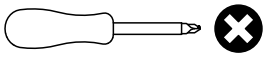

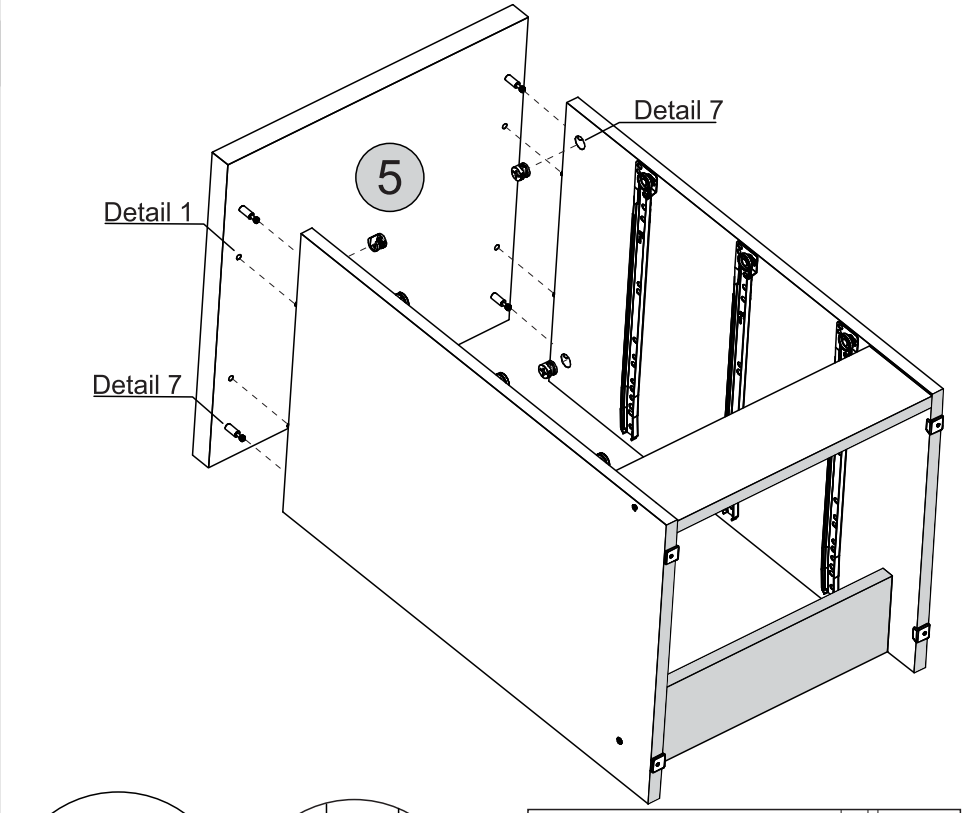

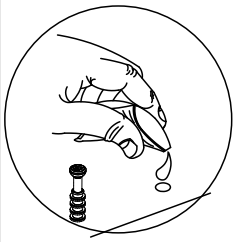

Detail 1

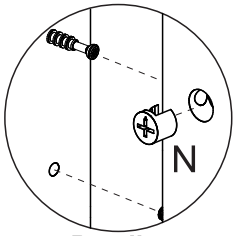

Detail 7

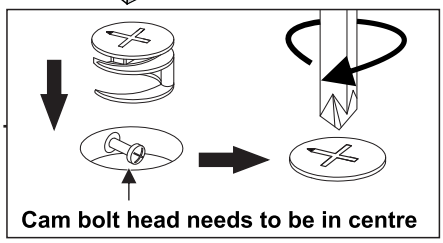

Cam bolt head needs to be in centre

STEP 10

PARTS REQUIRED

6 - BACK PANEL	x1

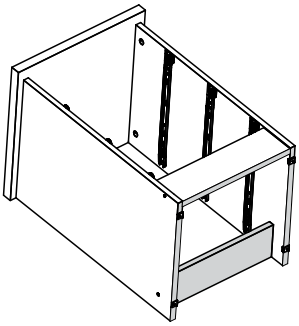

HARDWARE REQUIRED

F		14

TOOLS REQUIRED

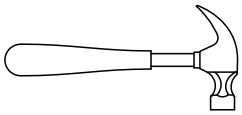

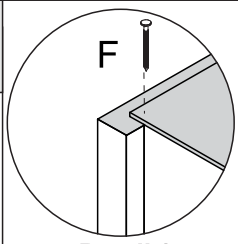

Detail 8

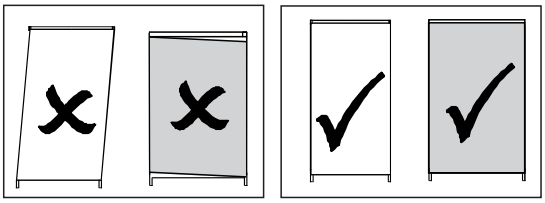

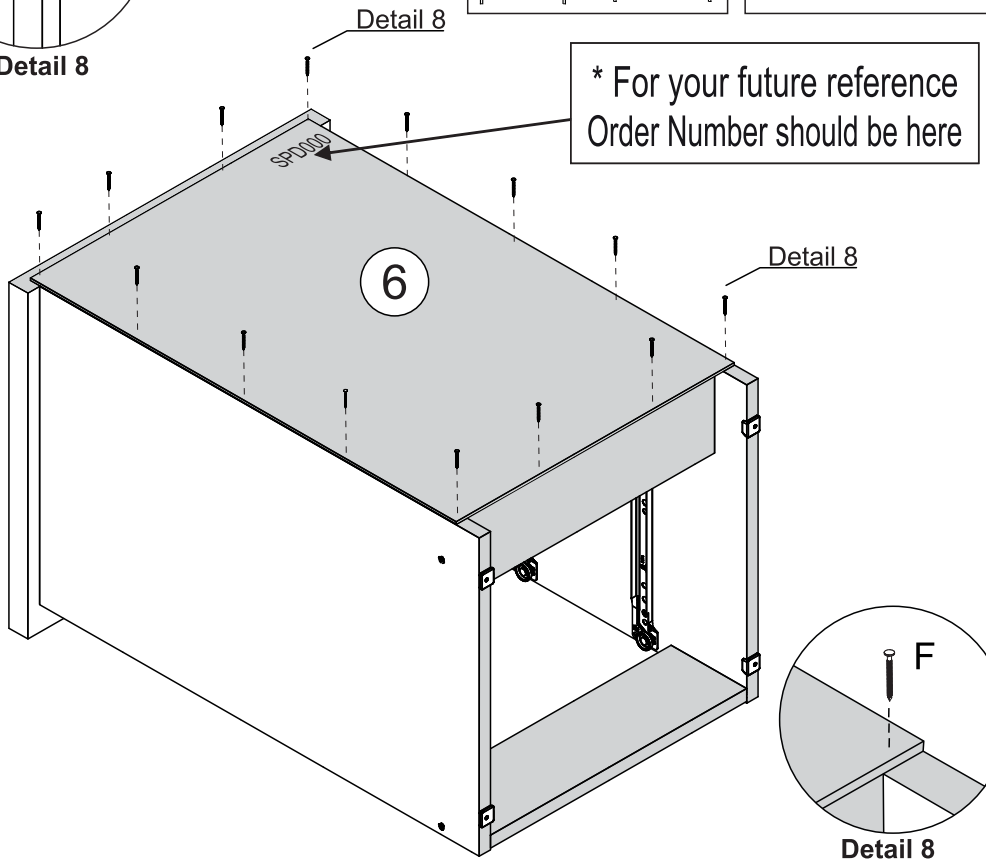

* For your future reference
Order Number should be here

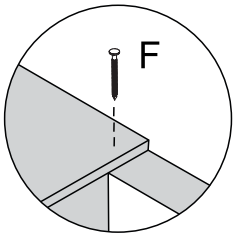

Detail 8

STEP 11

PARTS REQUIRED

7 - DRAWER SIDE	x6
8 - DRAWER BACK PANEL	x3

HARDWARE REQUIRED

E	Ø6 x 30mm	24
K	GLUE	01

TOOLS REQUIRED

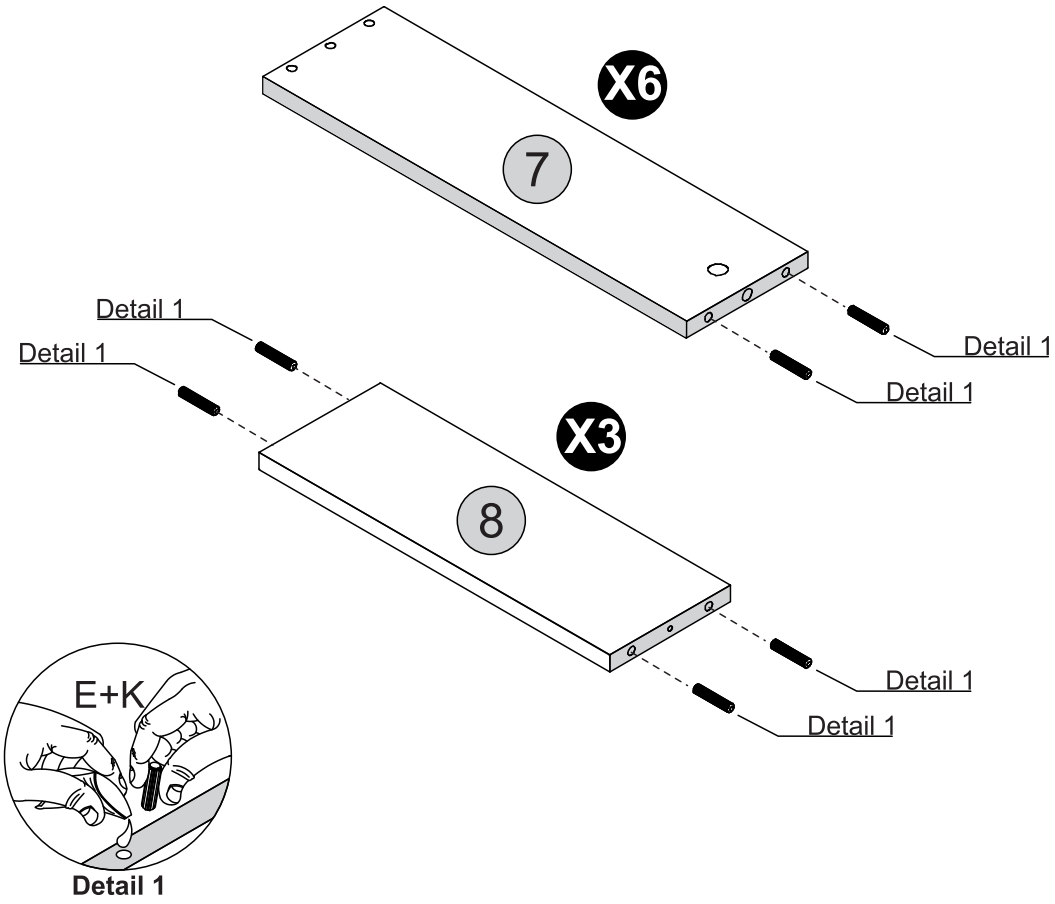

STEP 12

PARTS REQUIRED

9 - DRAWER FRONT	x3

HARDWARE REQUIRED

G		06

TOOLS REQUIRED

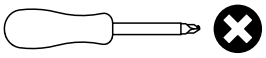

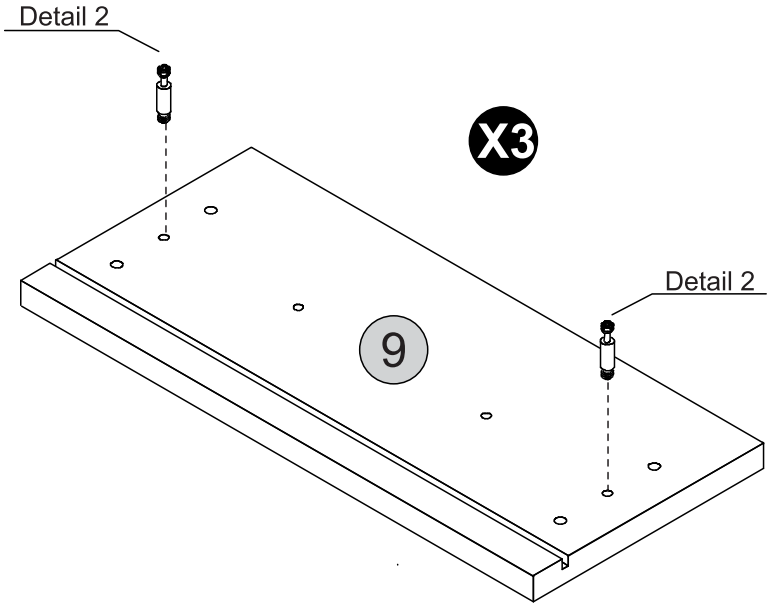

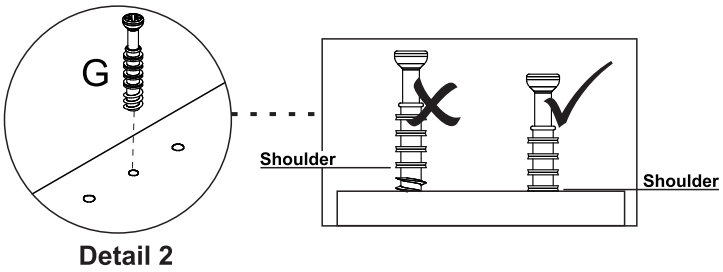

STEP 13

PARTS REQUIRED

7 - DRAWER SIDE	x6
8 - DRAWER BACK PANEL	x3

HARDWARE REQUIRED

D	Ø4 x 50mm	06

TOOLS REQUIRED

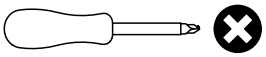

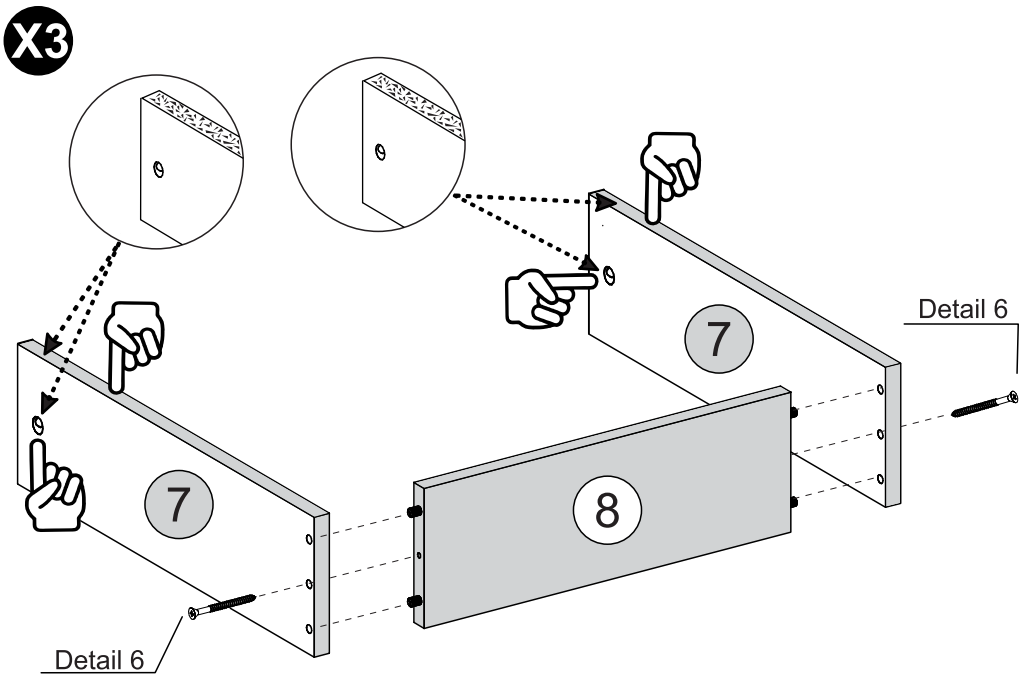

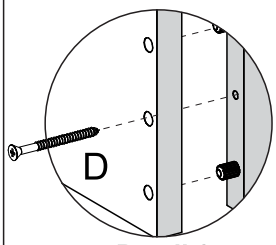

Detail 6

STEP 14

PARTS REQUIRED

9 - DRAWER FRONT	x3

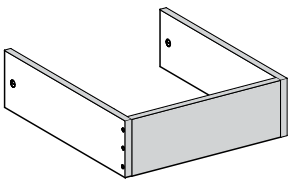

HARDWARE REQUIRED

H		06
K	GLUE	01

TOOLS REQUIRED

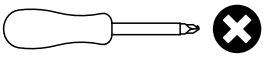

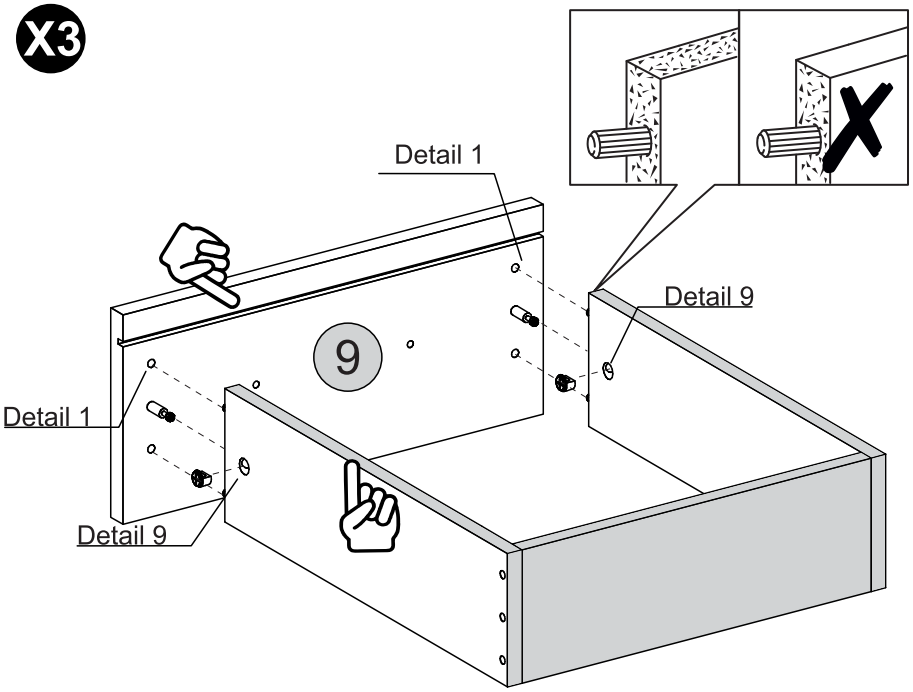

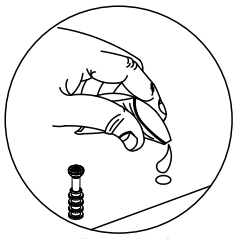

Detail 1

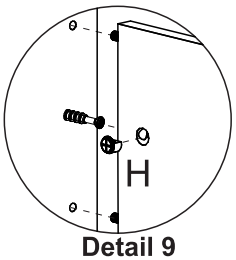

Detail 9

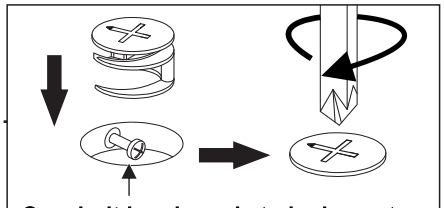

Cam bolt head needs to be in centre

STEP 15

PARTS REQUIRED

10 -DRAWER BOTTOM	x3

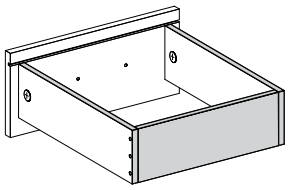

HARDWARE REQUIRED

F	10 x 10	12

TOOLS REQUIRED

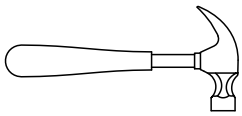

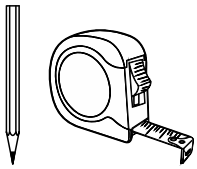

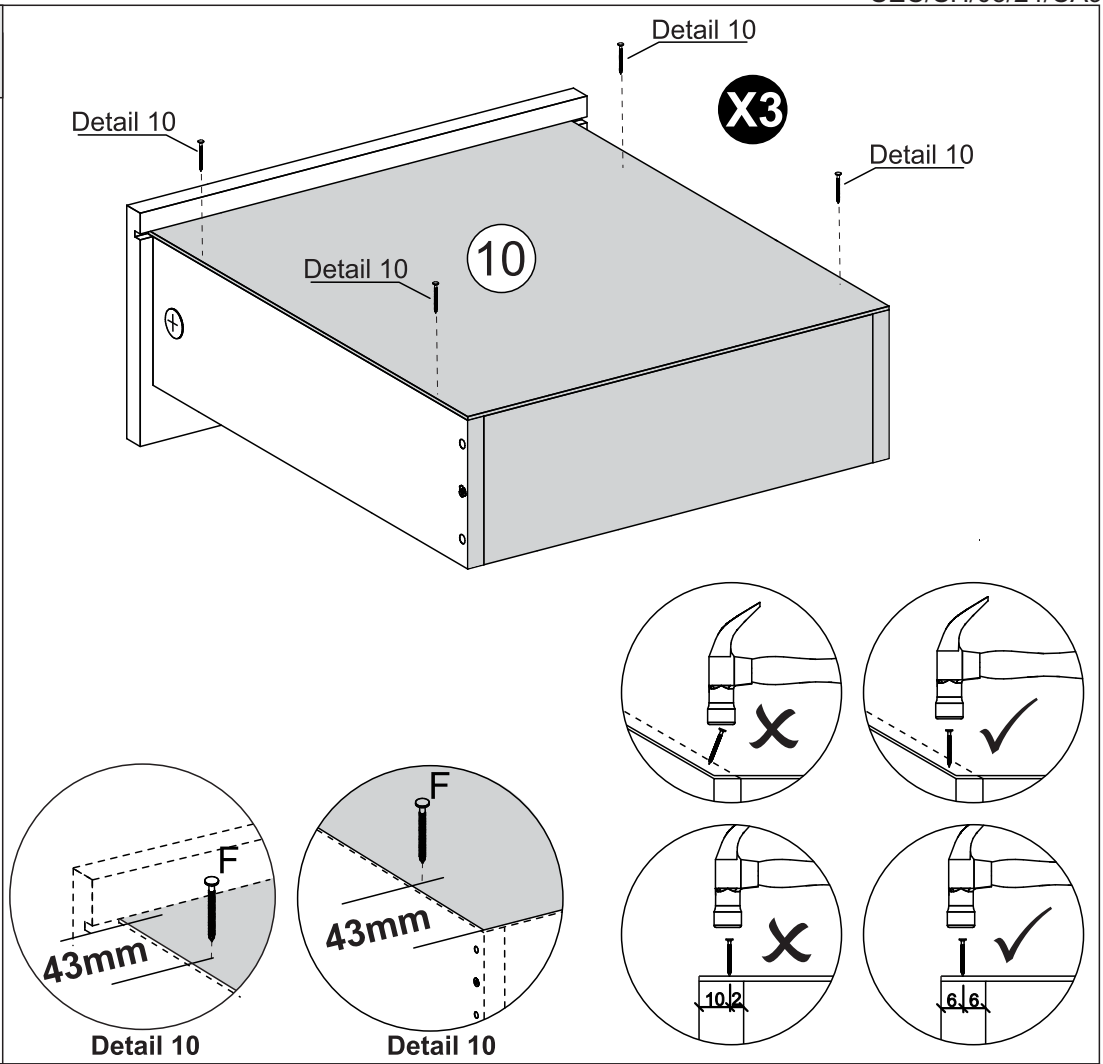

STEP 16

PARTS REQUIRED

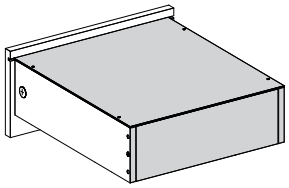

HARDWARE REQUIRED

F	10 x 10	12

TOOLS REQUIRED

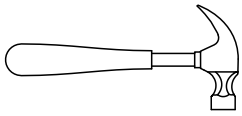

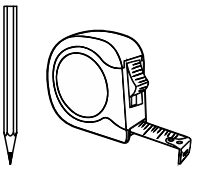

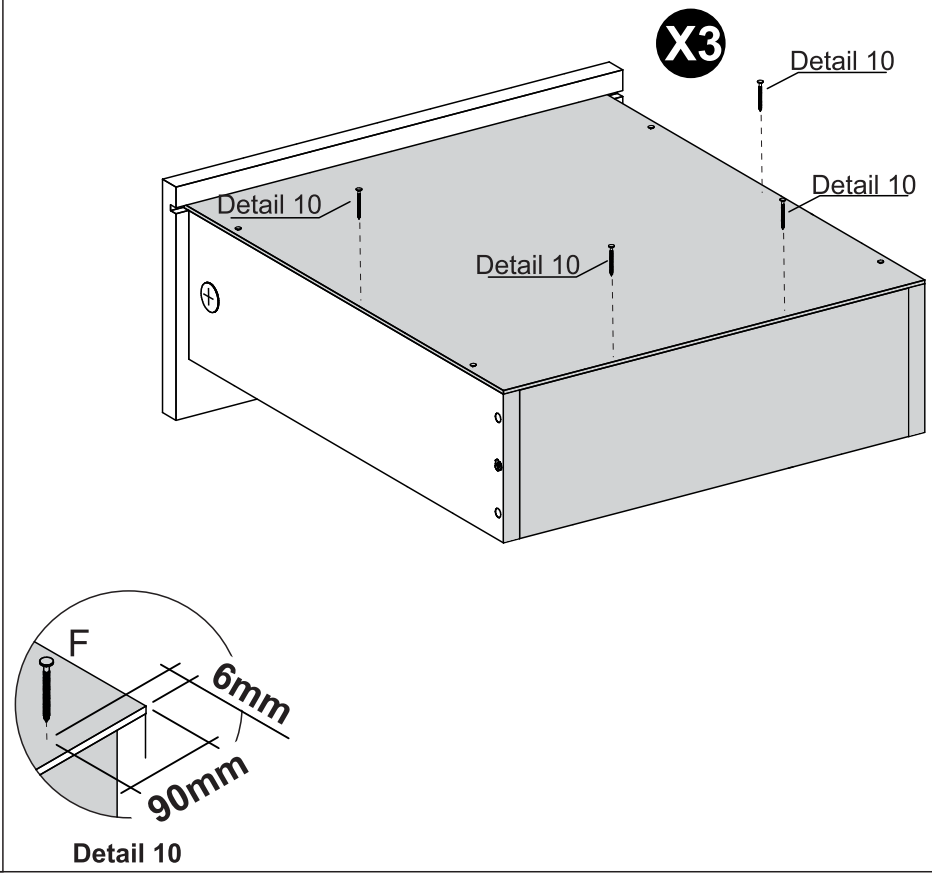

STEP 17

PARTS REQUIRED

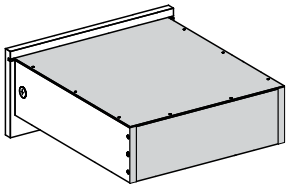

HARDWARE REQUIRED

B	Ø4,0 x 14mm	12
M	LEFT	03
M	RIGHT	03

TOOLS REQUIRED

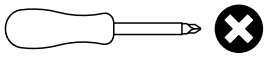

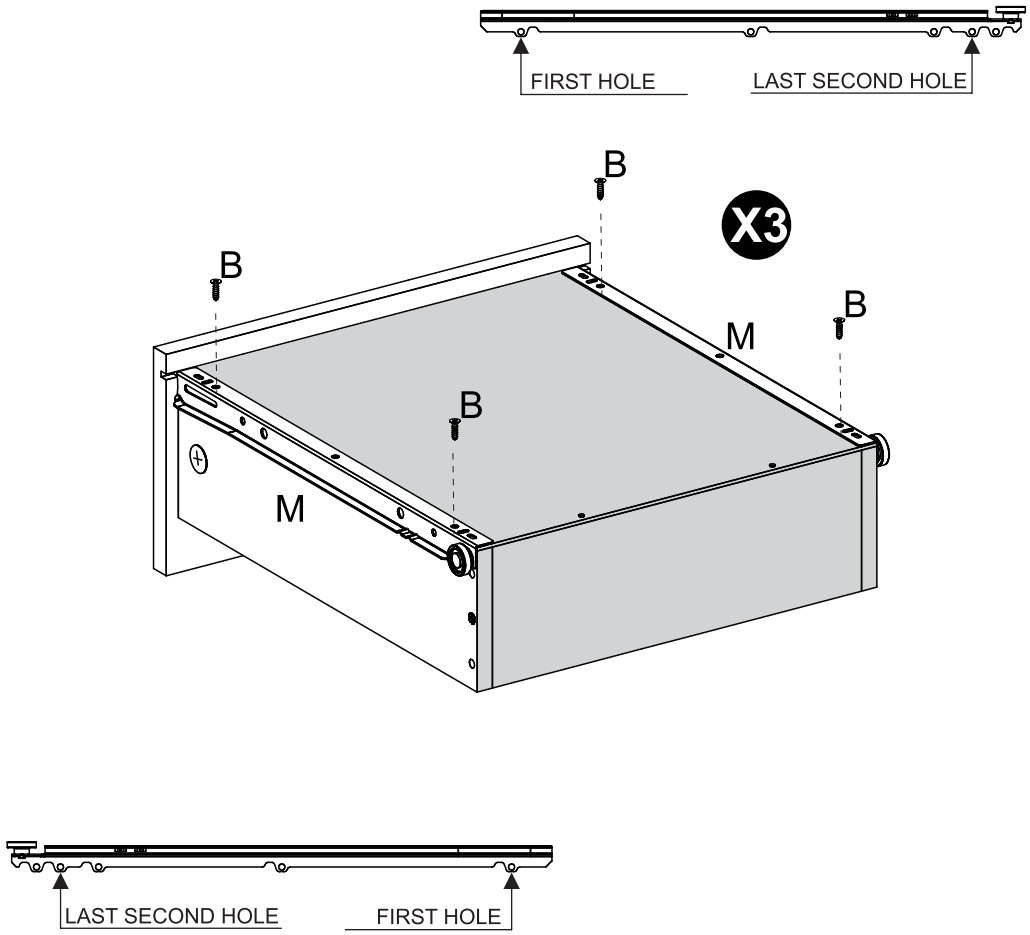

STEP 18

PARTS REQUIRED

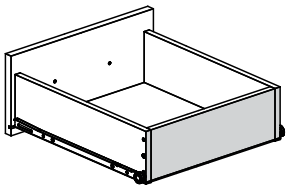

HARDWARE REQUIRED

C	Ø4,0 x 20mm	06
L		03

TOOLS REQUIRED

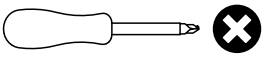

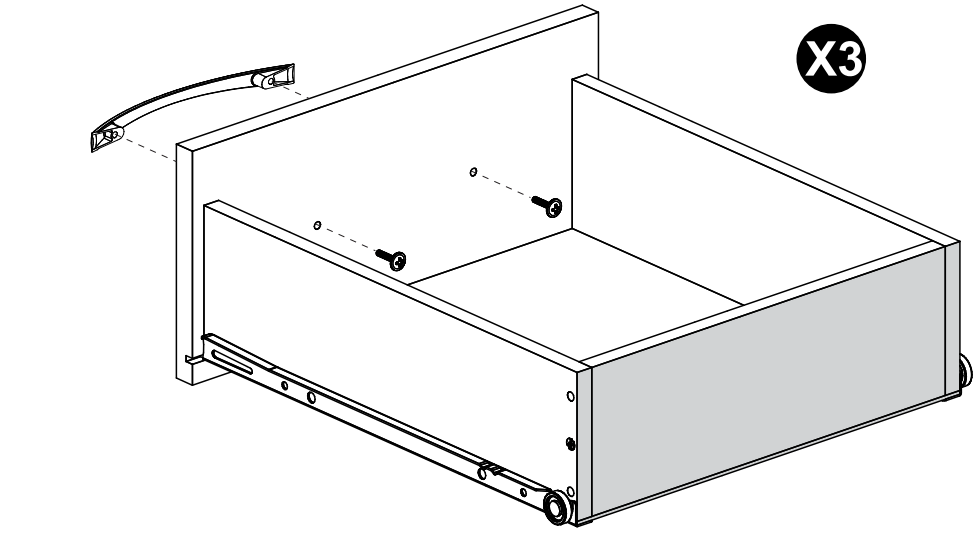

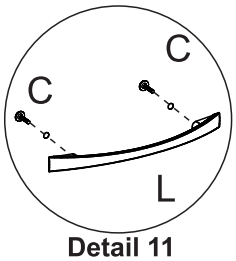

Detail 11

STEP 19

PARTS REQUIRED

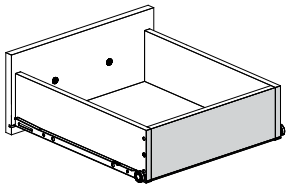

HARDWARE REQUIRED

R		06

TOOLS REQUIRED

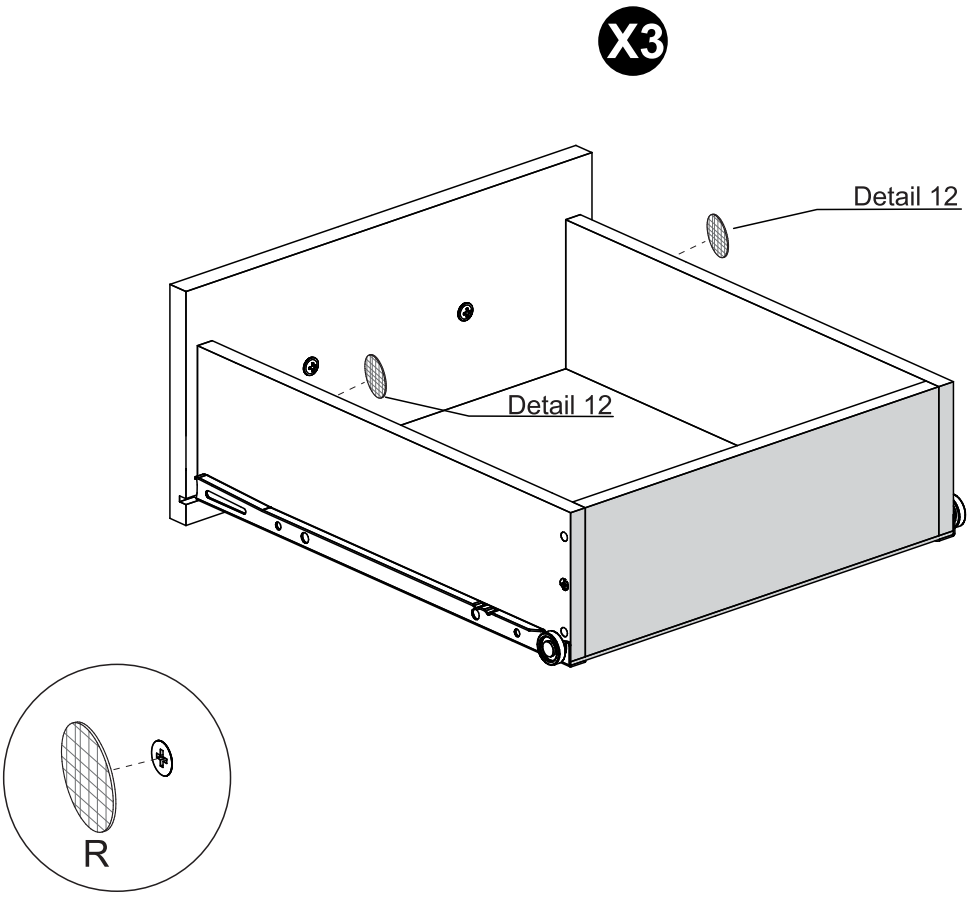

Detail 12

STEP 20

PARTS REQUIRED

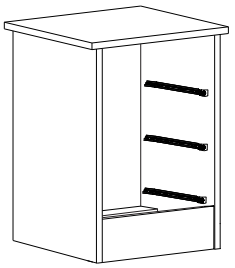

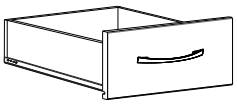

HARDWARE REQUIRED

J		04

TOOLS REQUIRED

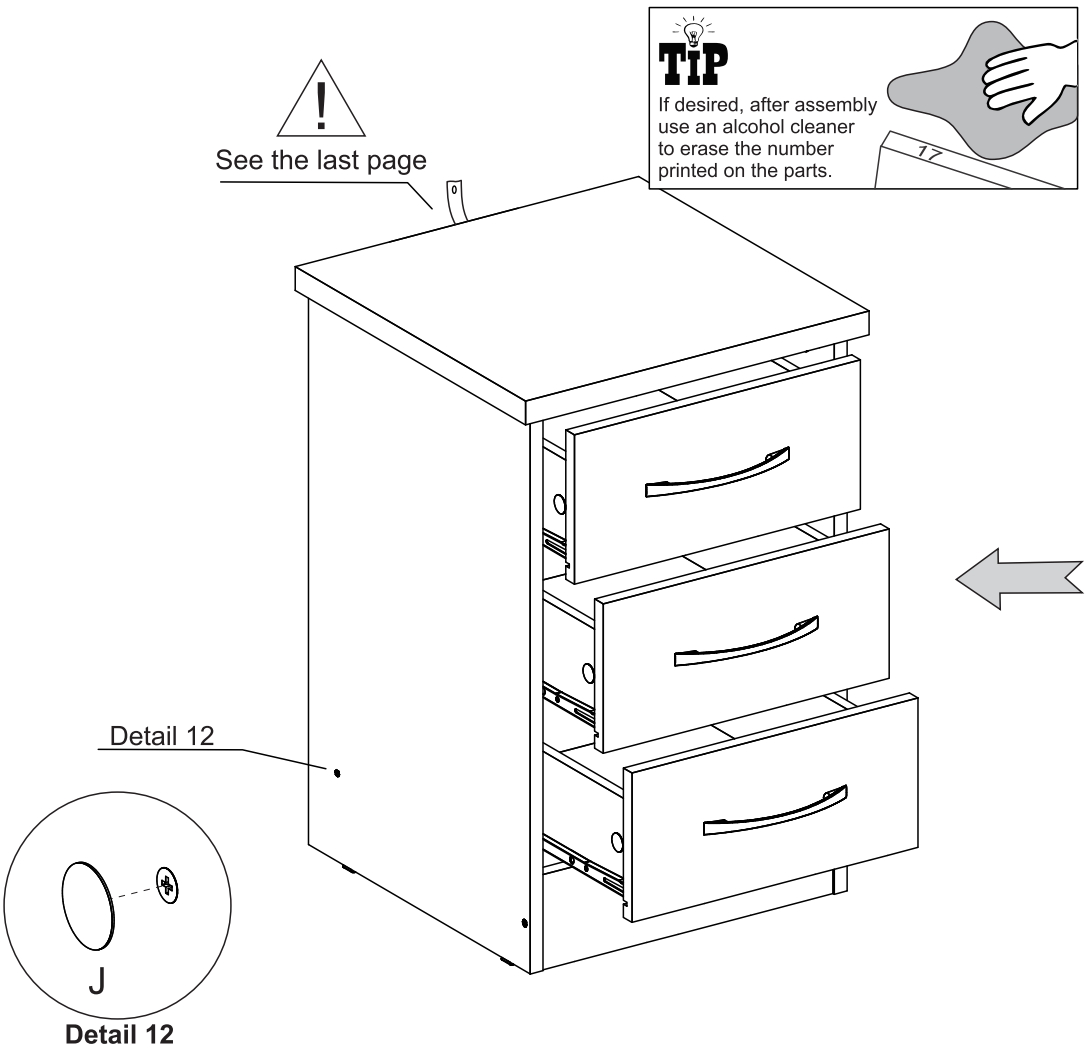

Detail 12

WARNING

Serious or fatal injuries can occur from furniture tipping over. To prevent the furniture from tipping over we recommend that it is permanently fixed to the wall.
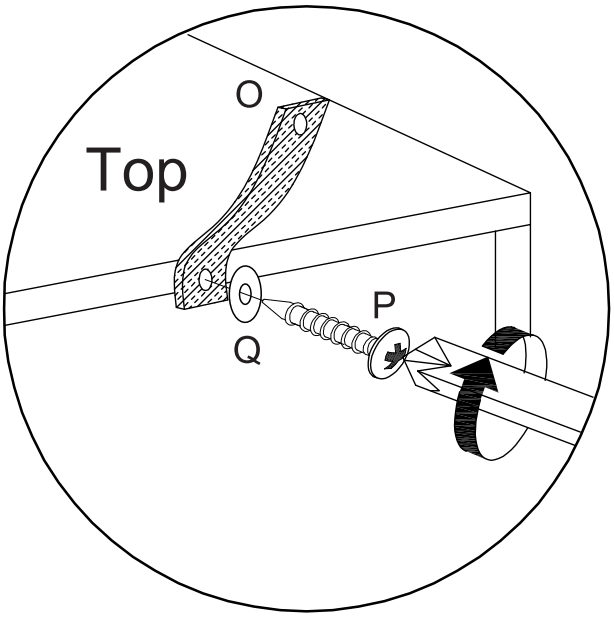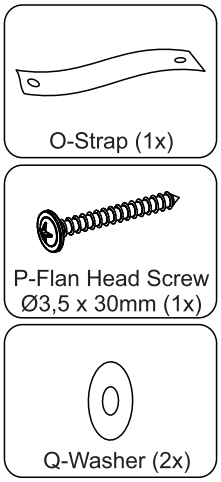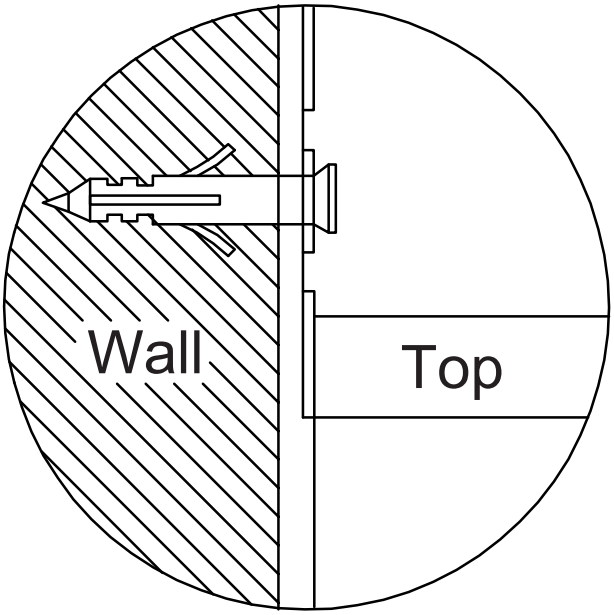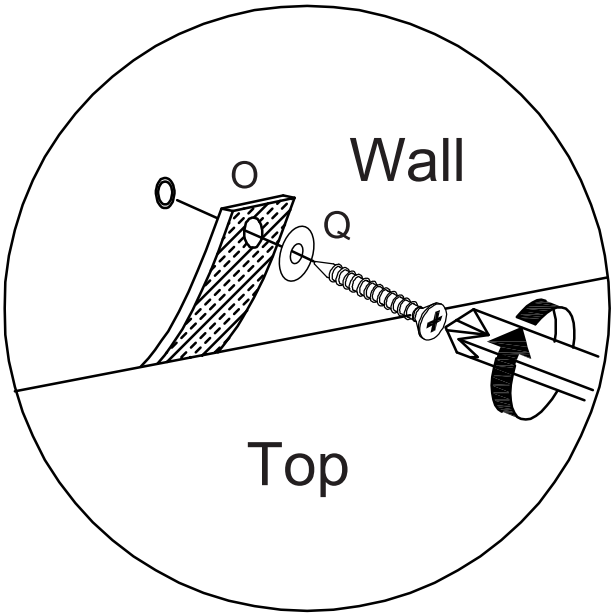
Wall fixings are not supplied with this product as different wall materials require different types of fixing devices.
Please make sure you use fixings suitable for the walls in your home.