LUDLOW 2 DOOR WARDROBE
WHITE
ASSEMBLY INSTRUCTIONS

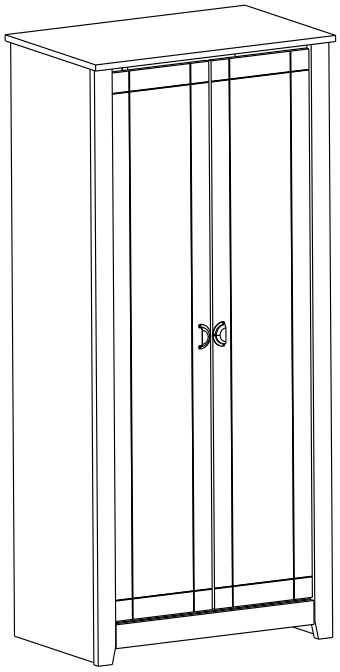

IMPORTANT

FOR DOMESTIC USE ONLY

PLEASE READ BEFORE YOU CONTINUE FURTHER

CARE AND MAINTENANCE

After unpacking this product please keep the original packaging in case it needs to be returned for any reason.
- Please ensure all fittings and parts are present before commencing with assembly.
- Never drag or push products as this could cause damage to the joints making it inferior.
- We strongly recommend that you keep children away from your work area.
- We recommend that you lay a blanket or sheet on the floor to avoid damage to both your floor and the product.
- Assemble this product as close to its final position as possible.
- Do not place this product next to a radiator or in direct sunlight.
- Do not drag or push items across your high gloss furniture as this may cause the surface to scratch
- Wood is a natural product and may expand if subjected to damp and may shrink or crack if subjected to heat.

Therefore it is recommended that room temperature is maintained, with no sudden temperature fluctuations.
- Make sure any spillage is wiped off immediately.
- Do not place hot or chilled items directly on to the surface, use a place mat or marking will occur.
- For general cleaning use a soft cotton or micro fibre cloth, and do not use detergents of any kind.
- From time to time it may be necessary to tighten fittings, regular inspections should be carried out.
- Do not place on a wet or damp floor as staining may occur to your floor.

TOOLS REQUIRED

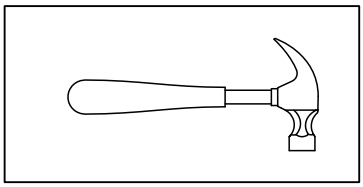

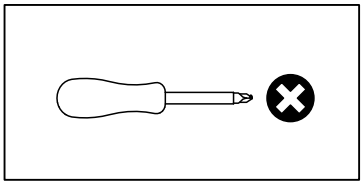

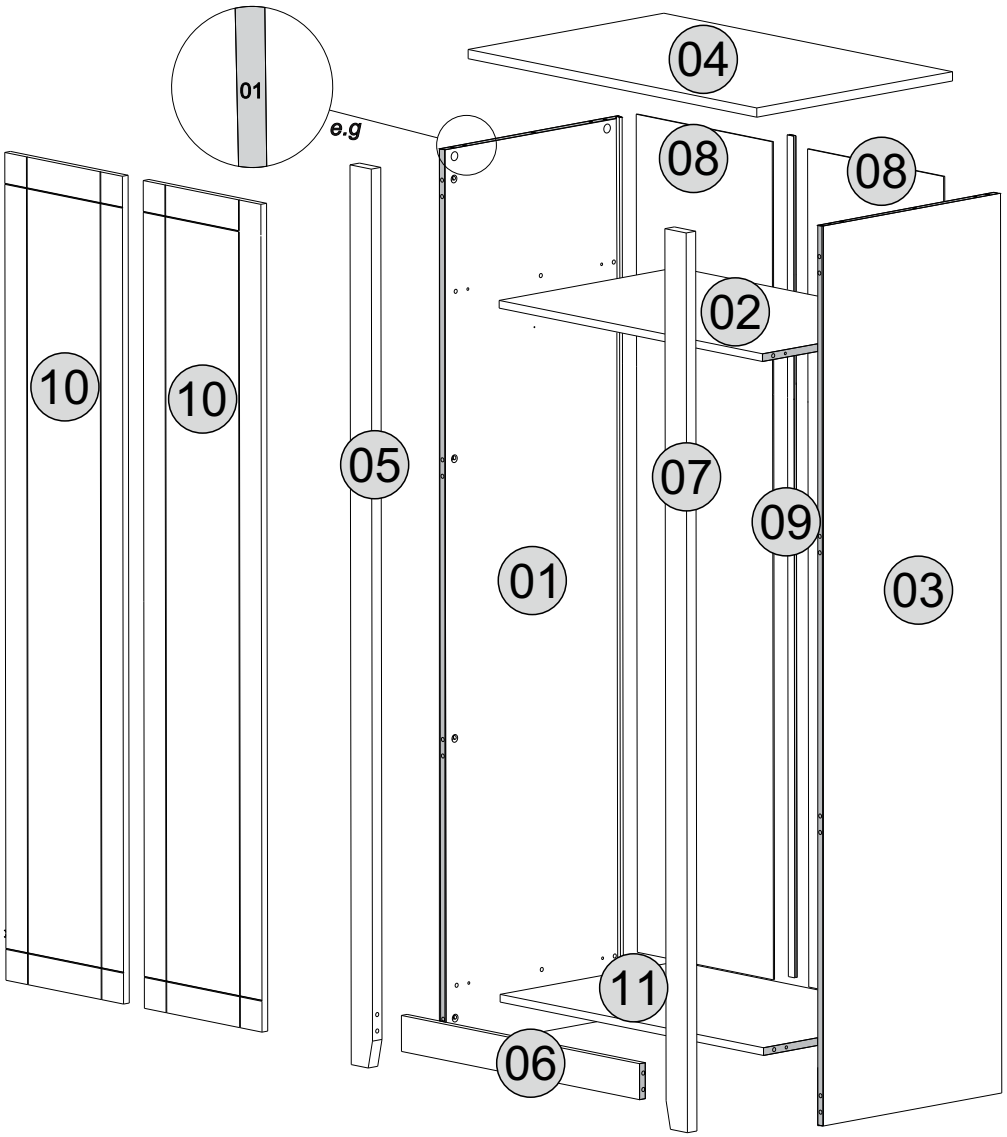

PARTS LIST

Please Note:
The below parts have been stamped with
the part number to help identify them during assembly.

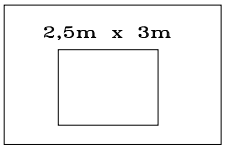

Part Number	Part Code	Part Description	Quantity	Carton
01	S100-101-065-DV1-01	Left Side Panel	1	2/2
02	S100-101-065-DV1-02	Shelf	1	2/2
03	S100-101-065-DV1-03	Right Side Panel	1	2/2
04	S100-101-065-DV1-04	Top Panel	1	1/2
05	S100-101-065-DV1-05	Front Left Upright	1	1/2
06	S100-101-065-DV1-06	Crossbeam	1	1/2
07	S100-101-065-DV1-07	Front Right Upright	1	1/2
08	S100-101-065-DV1-08	Back Panel	1	2/2
09	S100-101-065-DV1-09	Back Panel Strip	1	2/2
10	S100-101-065-DV1-10	Door	2	1/2
11	S100-101-065-DV1-11	Base	1	2/2

FITTINGS LIST

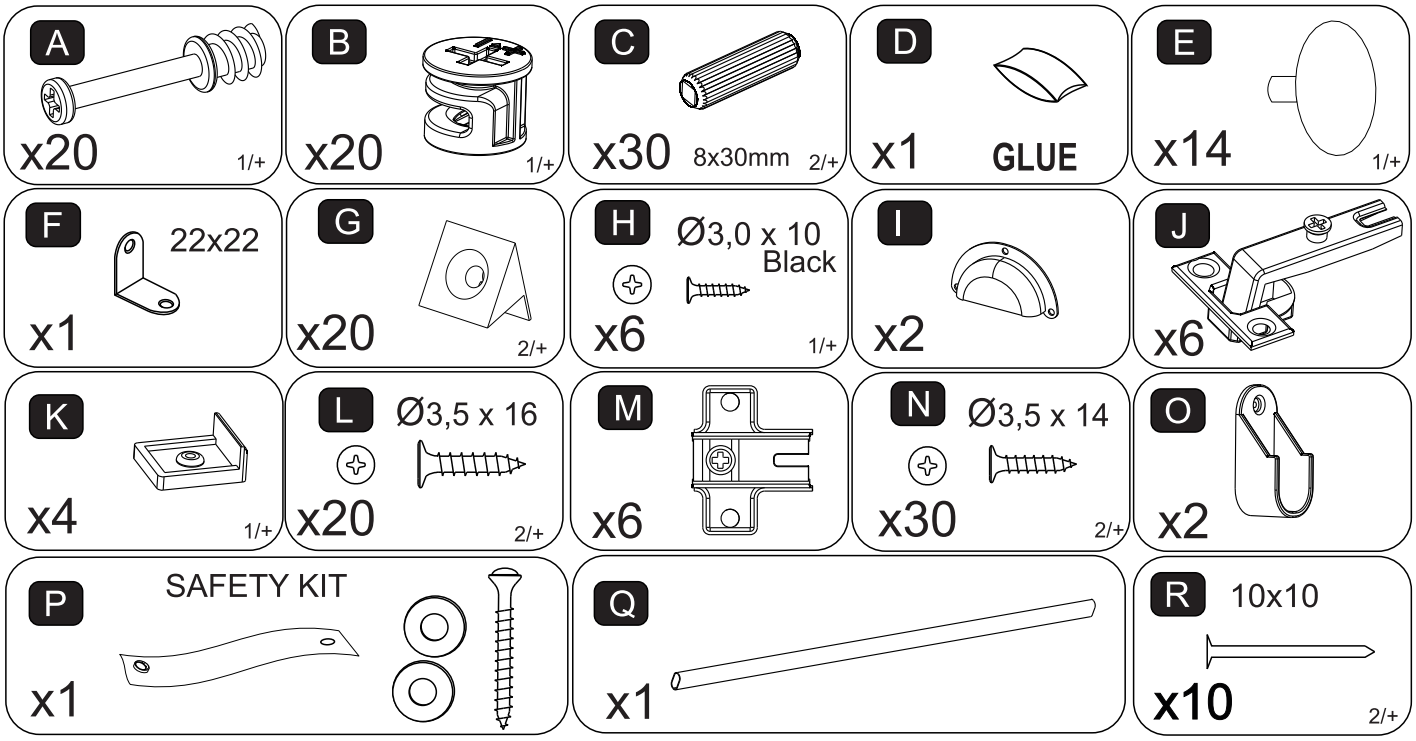

TIPS FOR FITTING CAM-LOCKS

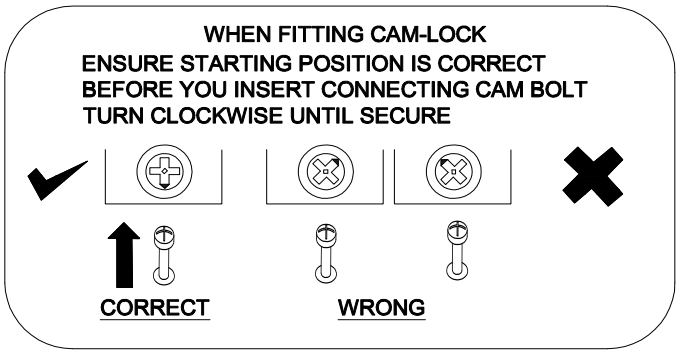

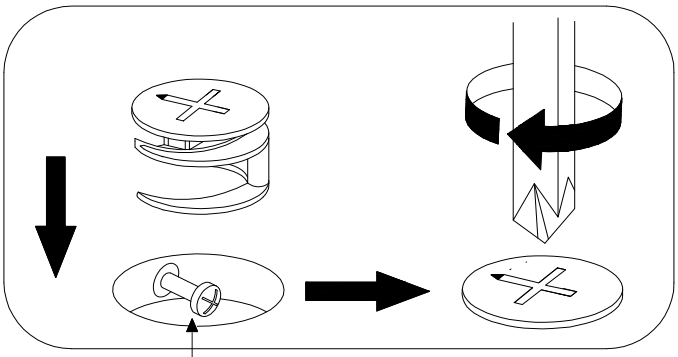

Cam bolt head needs to be in centre

CAMBOLT

Tighten until shoulder is flush with panel. Do not overtighten or undertighten (see example below)

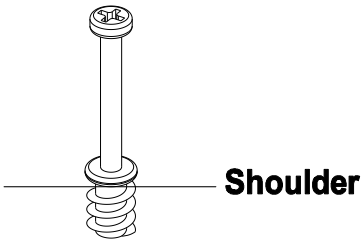

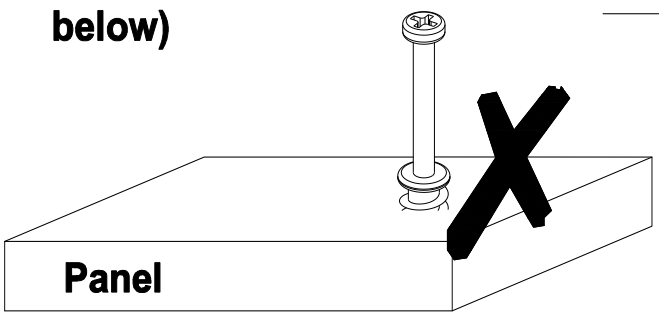

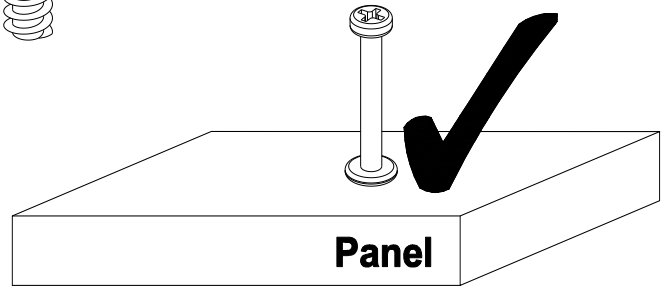

STEP 1

PARTS REQUIRED

01- LEFT SIDE PANEL	x1
03- RIGHT SIDE PANEL	x1

HARDWARE REQUIRED

C	Ø8 x 30mm	06
D	GLUE	01

TOOLS REQUIRED

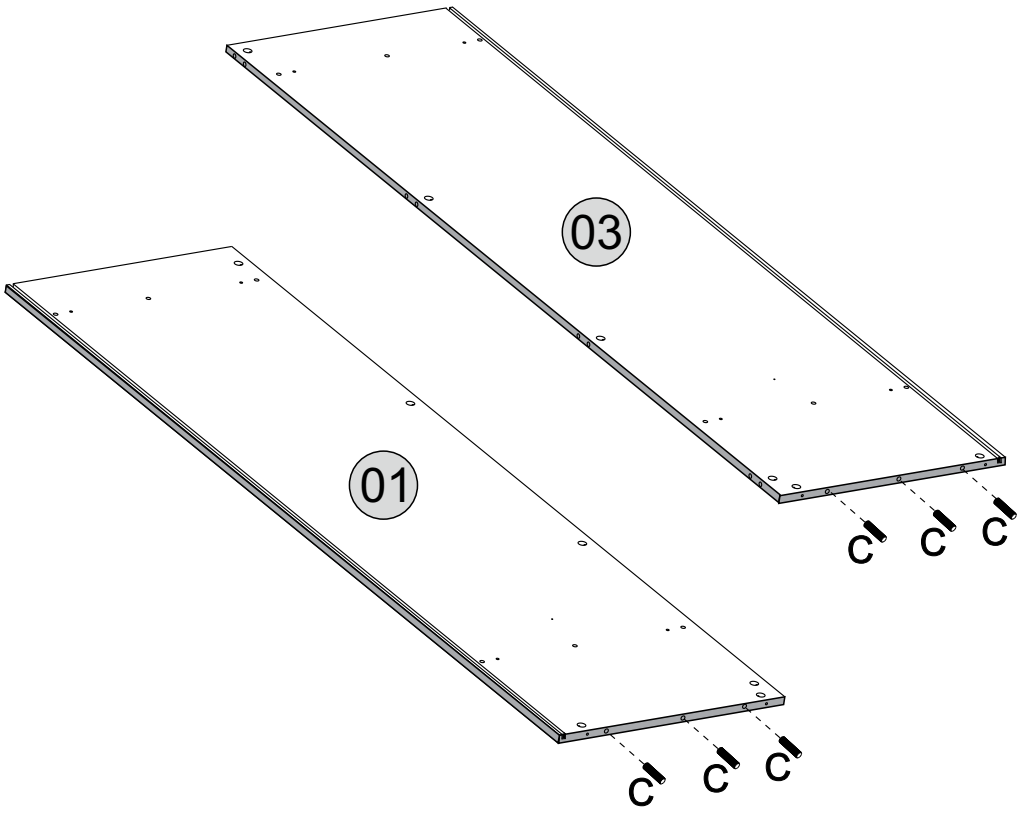

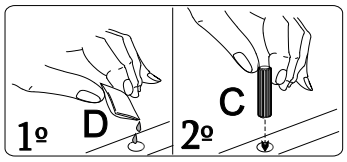

Glue must be added to the dowel holes on part 01 and 03.

STEP 2

PARTS REQUIRED

02- SHELF	x1
04- TOP PANEL	x1
11- BASE	x1

HARDWARE REQUIRED

A		04
C	Ø8 x 30mm	12
D	GLUE	01

TOOLS REQUIRED

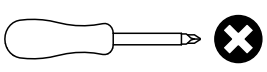

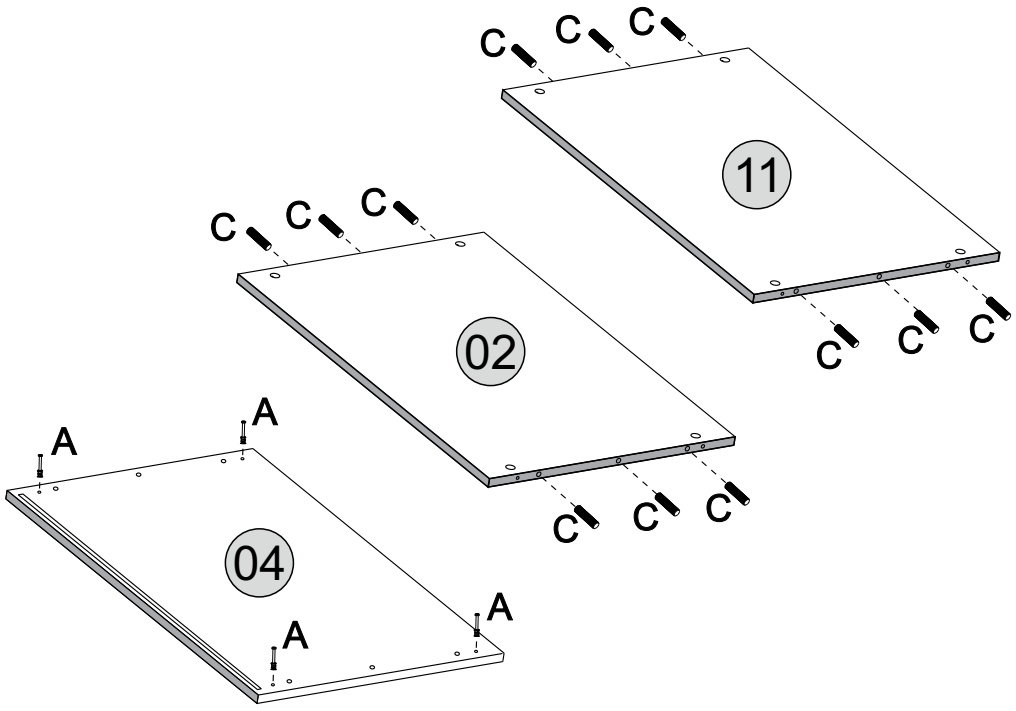

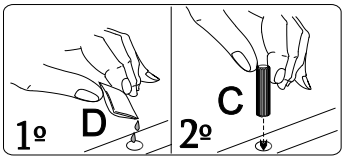

Glue must be added to the dowel holes on part 02 and 11.

STEP 3

PARTS REQUIRED

01- LEFT SIDE PANEL	x1

HARDWARE REQUIRED

A		04
K		02
R	10x10	02

TOOLS REQUIRED

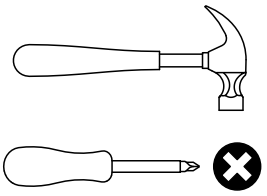

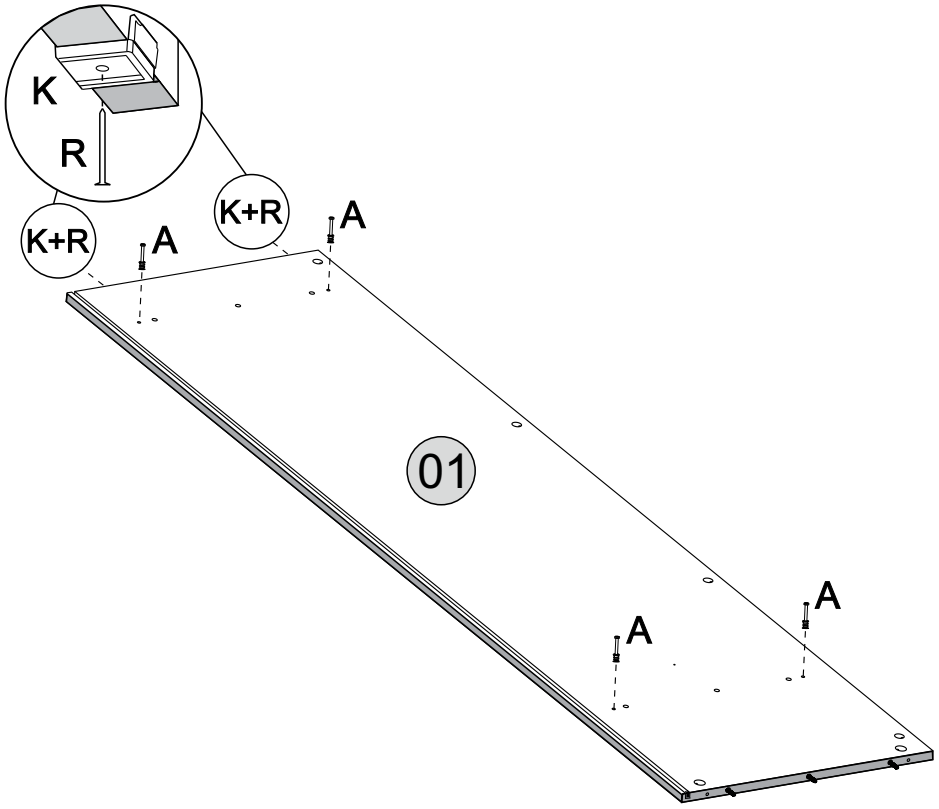

STEP 4

PARTS REQUIRED

03- RIGHT SIDE PANEL	x1

HARDWARE REQUIRED

A		04
K		02
R	10x10	02

TOOLS REQUIRED

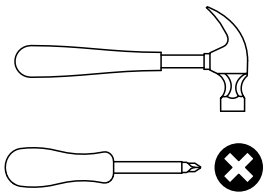

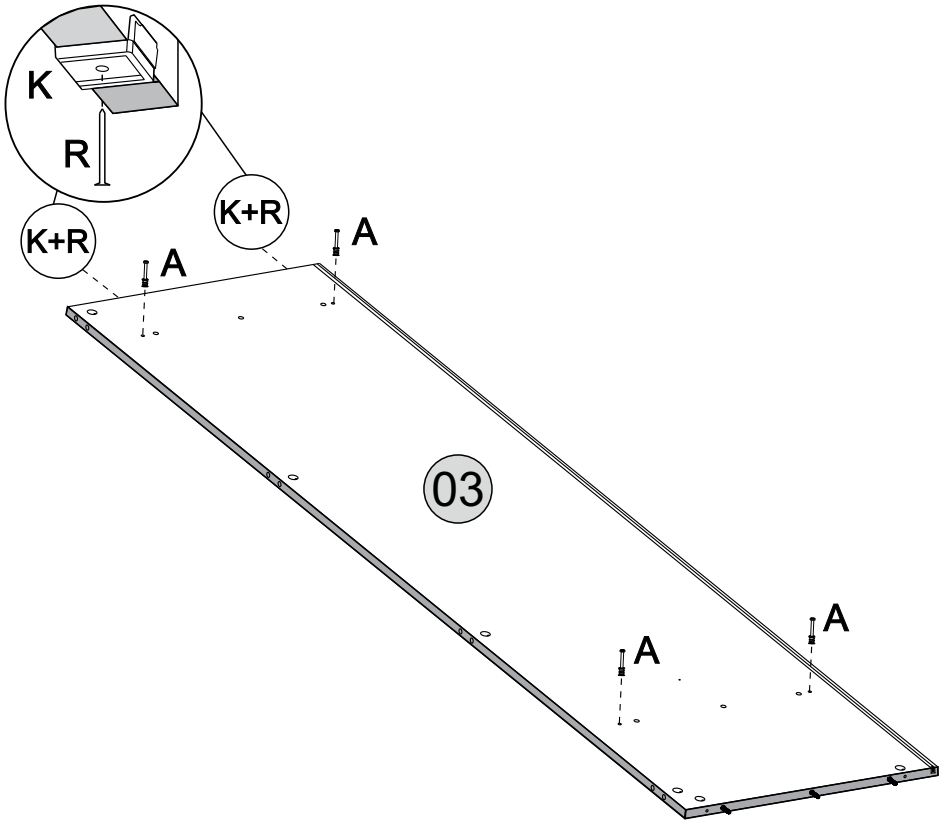

STEP 5

PARTS REQUIRED

05- FRONT LEFT UPRIGHT	x1
06- CROSSBEAM	x1
07- FRONT RIGHT UPRIGHT	x1

HARDWARE REQUIRED

C	Ø8 x 30mm	12
D	GLUE	01

TOOLS REQUIRED

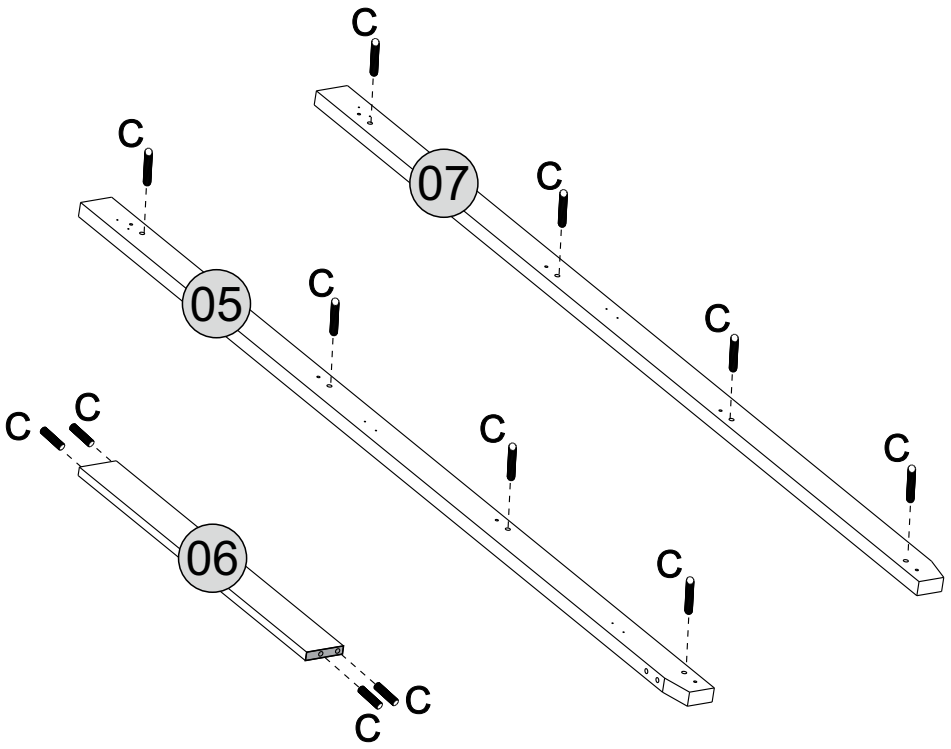

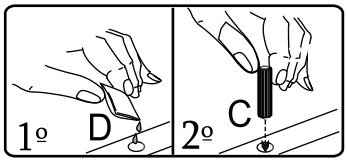

Glue must be added to the dowel holes on part 05, 06 and 07.

STEP 6

PARTS REQUIRED

05- FRONT LEFT UPRIGHT	x1
07- FRONT RIGHT UPRIGHT	x1

HARDWARE REQUIRED

A		08
M		06
N	Ø3,5 x 14	12

TOOLS REQUIRED

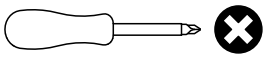

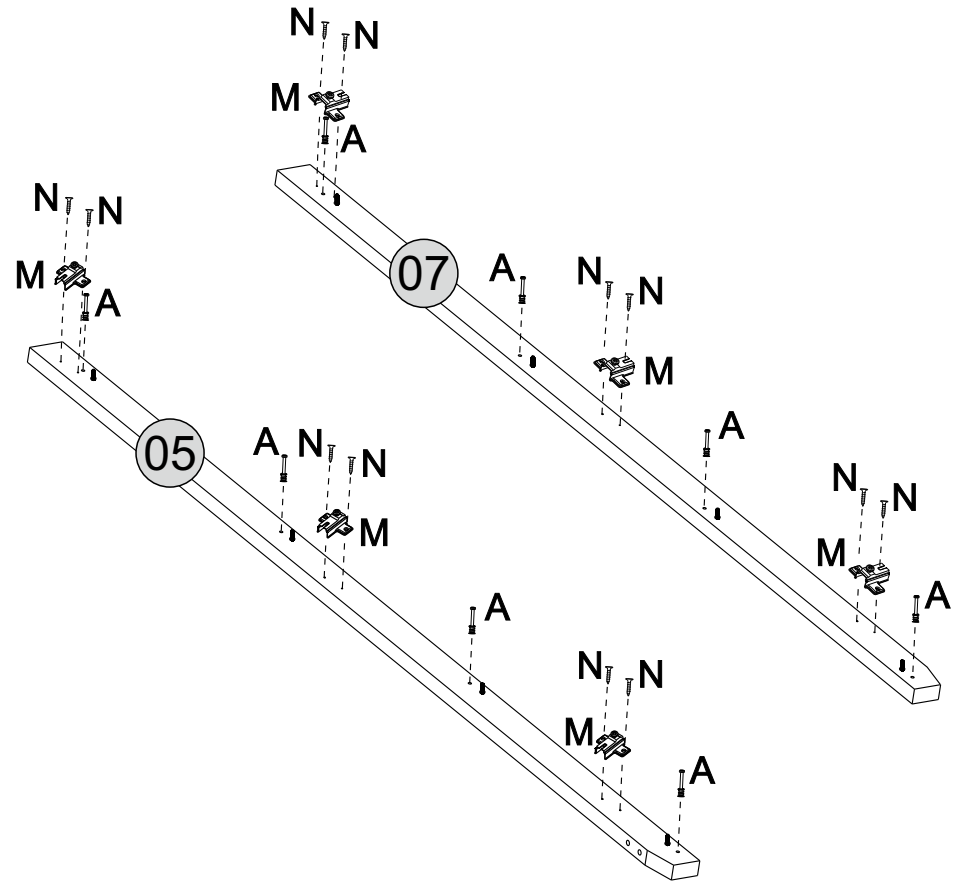

STEP 7

PARTS REQUIRED

01- LEFT SIDE PANEL	x1
02- SHELF	x1
03- RIGHT SIDE PANEL	x1
11- BASE	x1

HARDWARE REQUIRED

B		08
D	GLUE	01
E		04

TOOLS REQUIRED

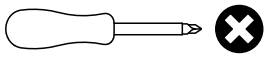

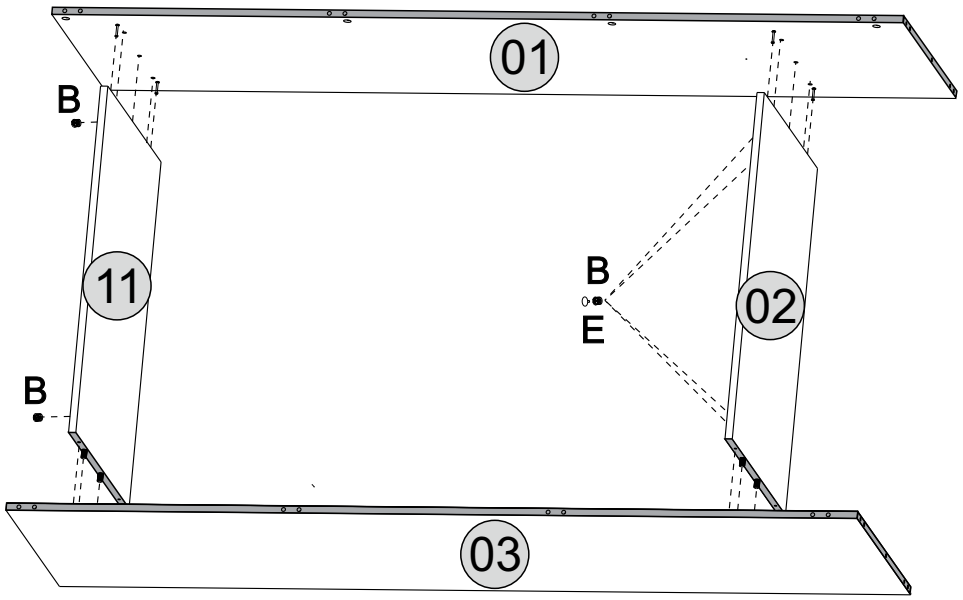

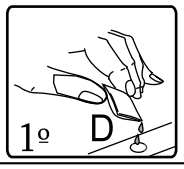

Glue must be added to the dowel holes on part 01 and 03.

Please refer to page 03 on how to use cams correctly.

STEP 8

PARTS REQUIRED

04- TOP PANEL	x1

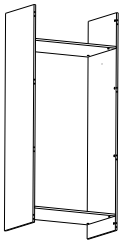

HARDWARE REQUIRED

B		04
D	GLUE	01
E		04

TOOLS REQUIRED

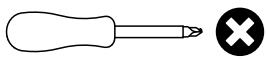

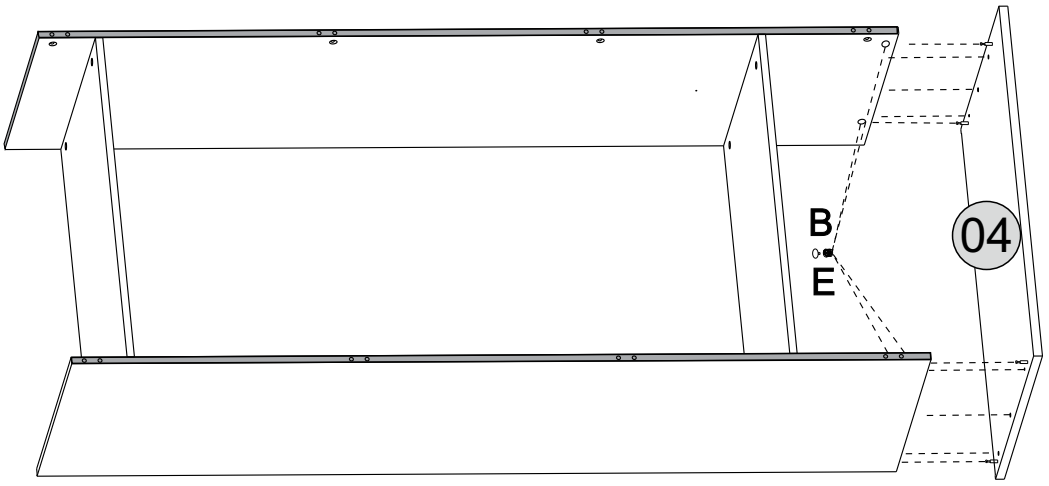

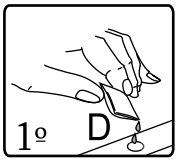

Glue must be added to the dowel holes on part 04.

Please refer to page 03 on how to use cams correctly.

STEP 9

PARTS REQUIRED

08- BACK PANEL	x2
09- BACK PANEL STRIP	x1

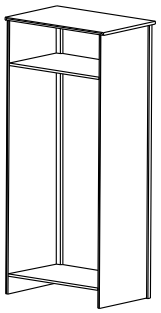

HARDWARE REQUIRED

TOOLS REQUIRED

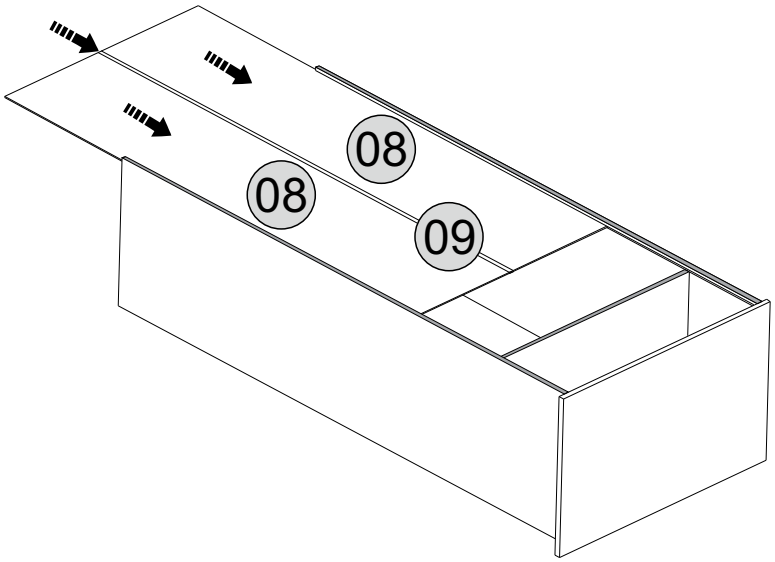

STEP 10

PARTS REQUIRED

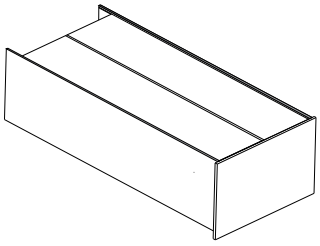

HARDWARE REQUIRED

G		20
L		20
R	10x10	06

TOOLS REQUIRED

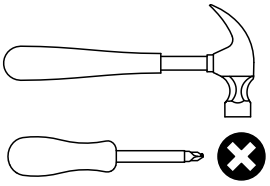

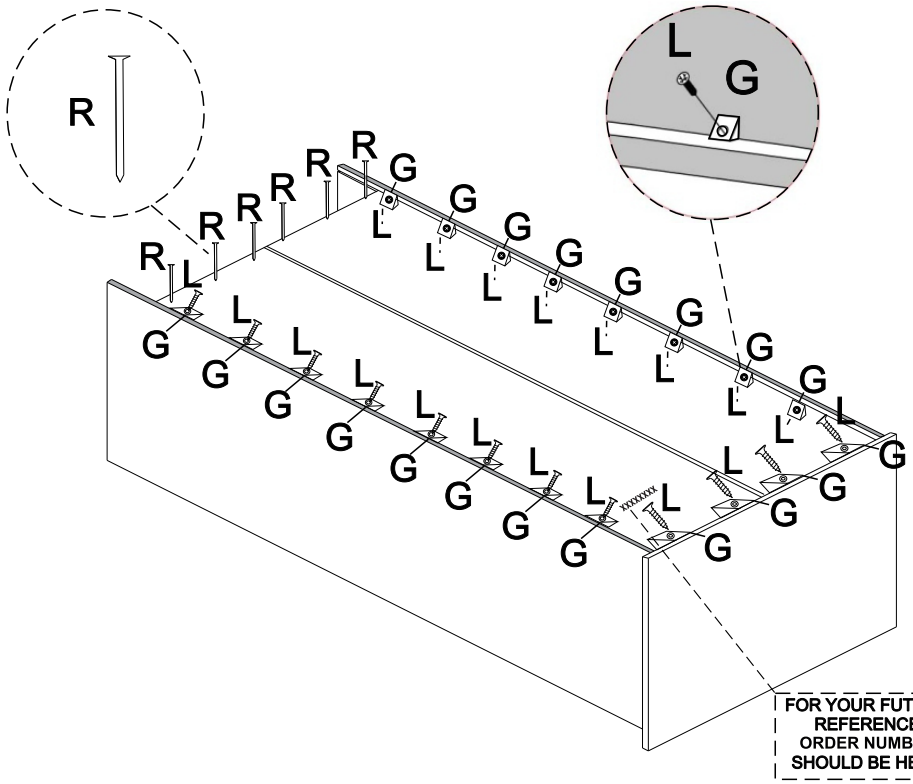

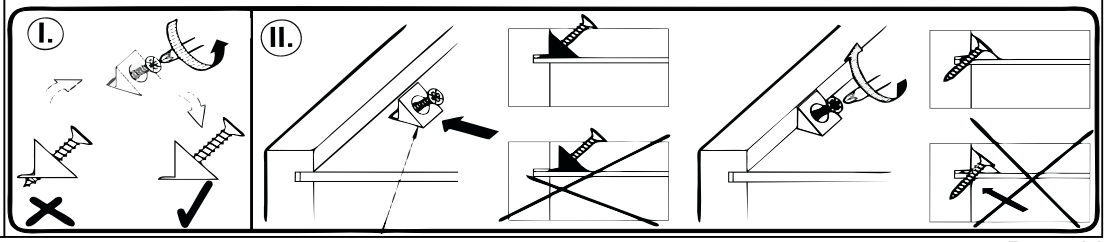

STEP 11

PARTS REQUIRED

05- FRONT LEFT UPRIGHT	x1
06- CROSSBEAM	x1
07- FRONT RIGHT UPRIGHT	x1

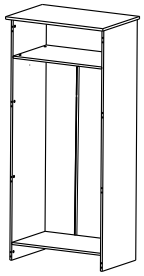

HARDWARE REQUIRED

B		08
D	GLUE	01

TOOLS REQUIRED

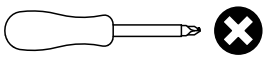

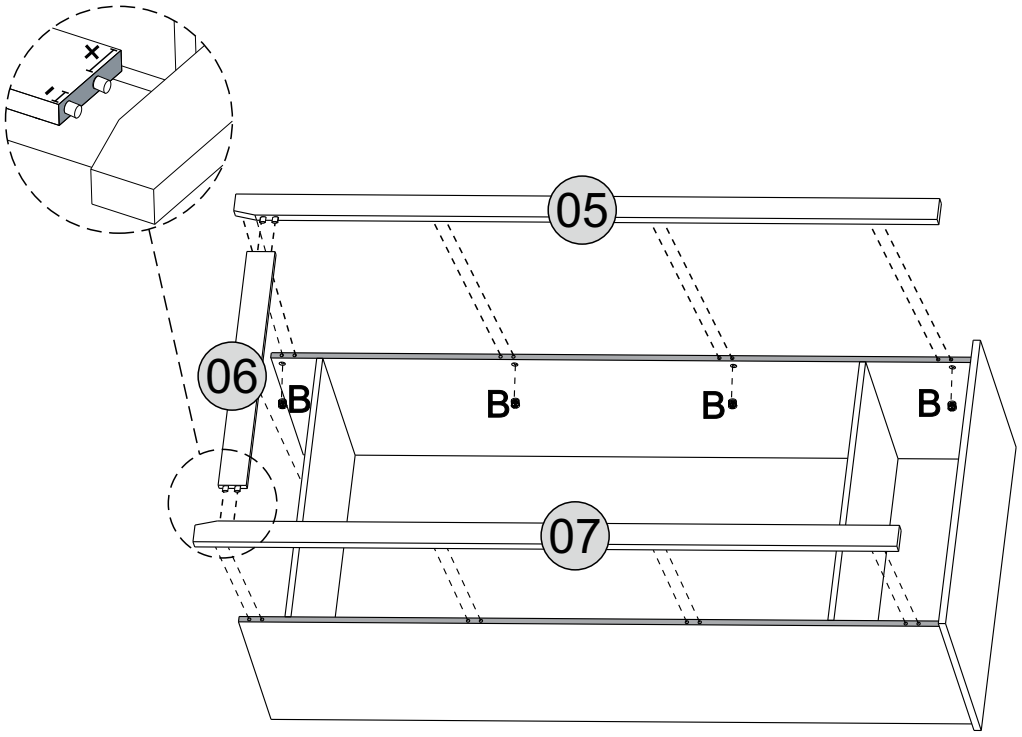

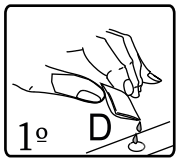

Glue must be added to the dowel holes on part 01 and 03.

STEP 12

PARTS REQUIRED

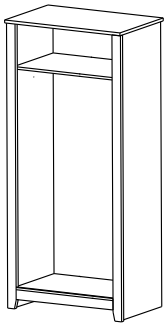

HARDWARE REQUIRED

E		06
F		01
N	Ø3,5 x 14	02

TOOLS REQUIRED

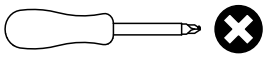

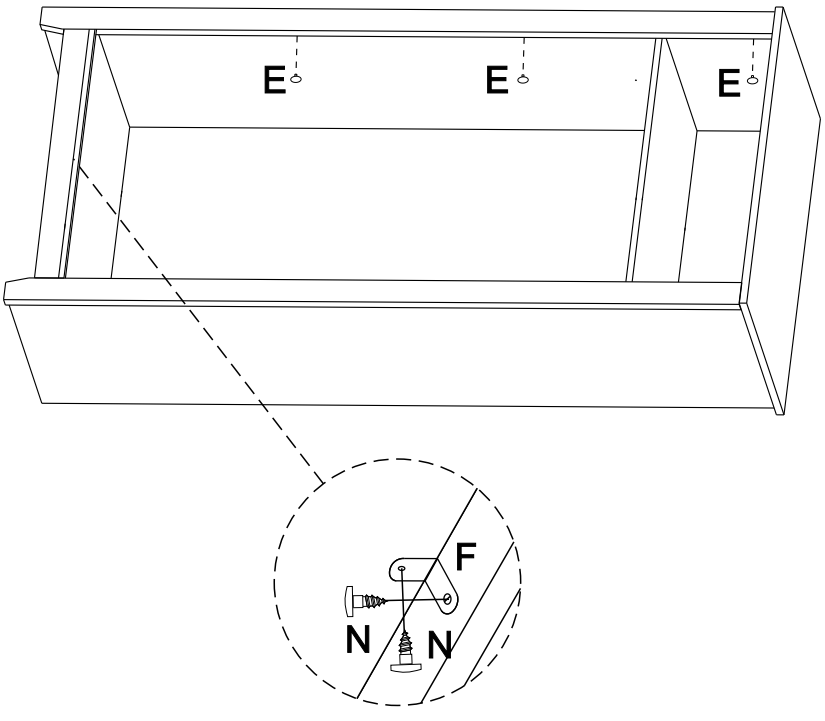

STEP 13

PARTS REQUIRED

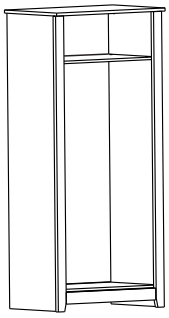

HARDWARE REQUIRED

N	Ø3,5 x 14	04
O		02
Q		01

TOOLS REQUIRED

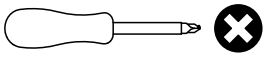

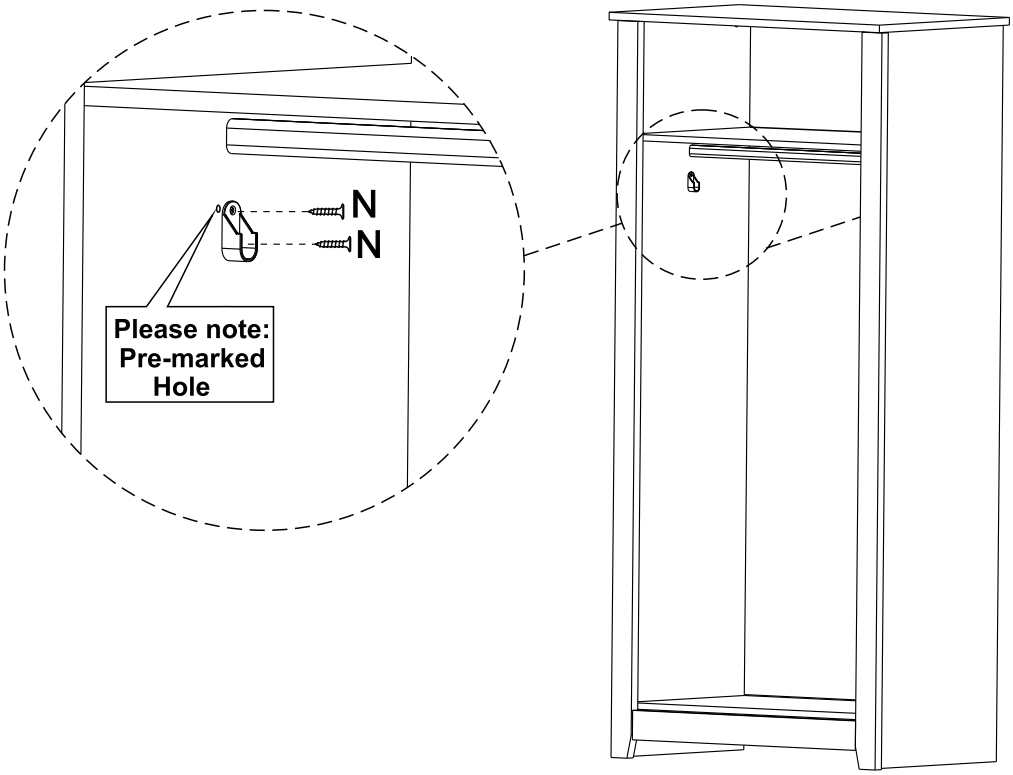

STEP 14

PARTS REQUIRED

10 - DOOR	x2

HARDWARE REQUIRED

J		06
N	Ø3,5 x 14	12

TOOLS REQUIRED

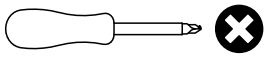

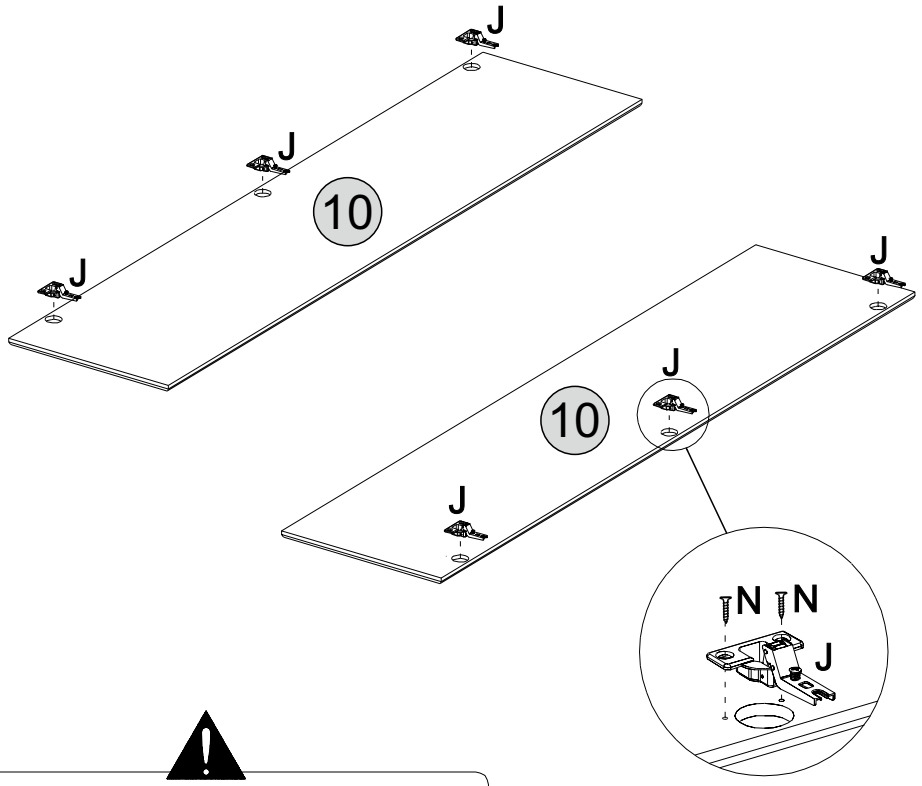

When fitting the door hinge (J) carefully line up the screw holes with those pre-drilled on the door, this will ensure the doors hang correctly.

STEP 15

PARTS REQUIRED

10 - DOOR	x2

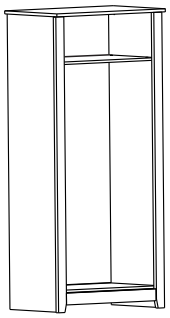

HARDWARE REQUIRED

H	Ø3,0 x 10 Black	06
I		02

TOOLS REQUIRED

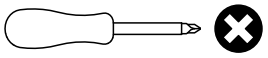

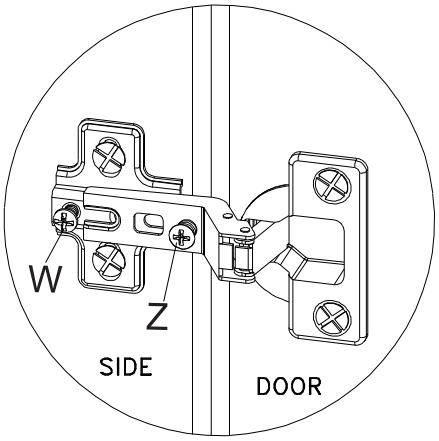

SHOULD THE DOORS OF YOUR WARDROBE NOT APPEAR EVEN WHEN CLOSED THEY MAY NEED ADJUSTING. THIS CAN BE DONE AS FOLLOWS: LOOSEN SCREW (W) A LITTLE. BY TURNING SCREW (Z) EITHER CLOCKWISE OR ANTICLOCKWISE (IN OR OUT) THE HINGE CAN BE ADJUSTED AND THE DOOR CORRECTLY ALIGNED. IF MORE THAN ONE HINGE NEEDS ATTENTION PLEASE ADJUST ONE AT A TIME. IF IN DOUBT PLEASE SEEK PROFESSIONAL HELP.

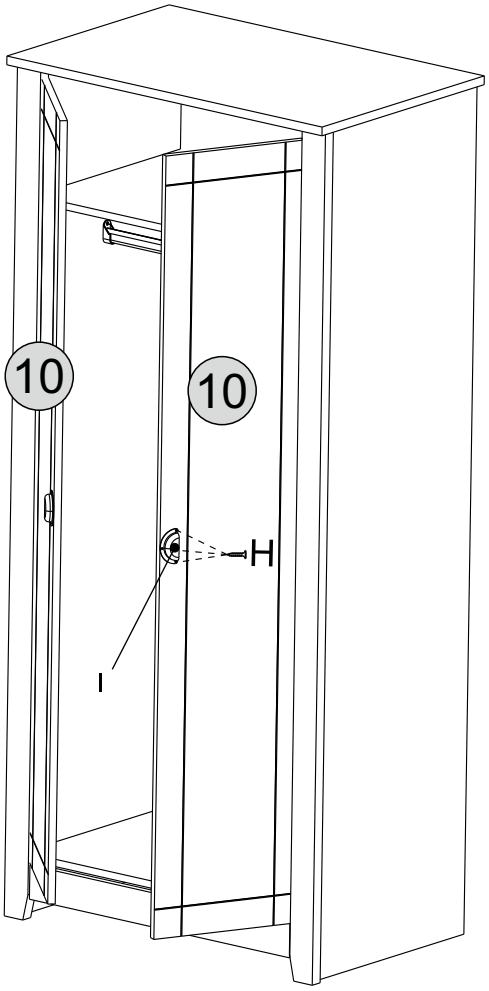

STEP 15

PARTS REQUIRED

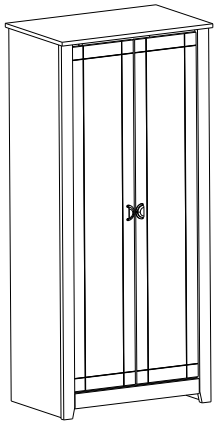

HARDWARE REQUIRED

P		01

TOOLS REQUIRED

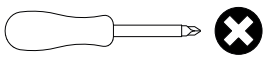

WARNING

Serious or fatal injuries can occur from furniture tipping over. To prevent the furniture from tipping over we recommend that it is permanently fixed to the wall.

Wall fixings are not supplied with this product as different wall materials require different types of fixing devices.
Please make sure you use fixings suitable for the walls in your home.

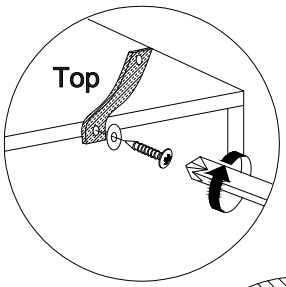

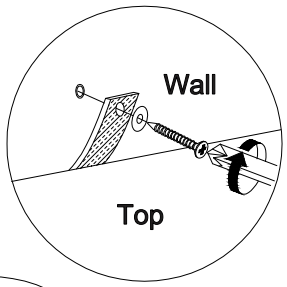

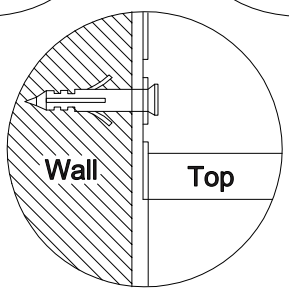

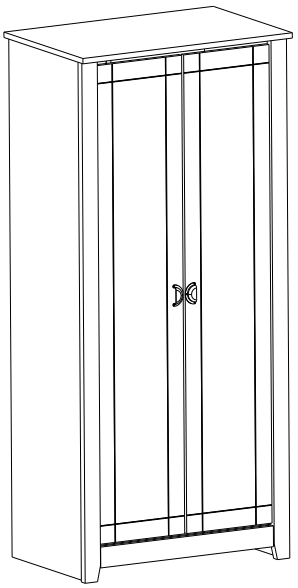

LUDLOW 2+2 DRAWER CHEST
WHITE
ASSEMBLY INSTRUCTIONS

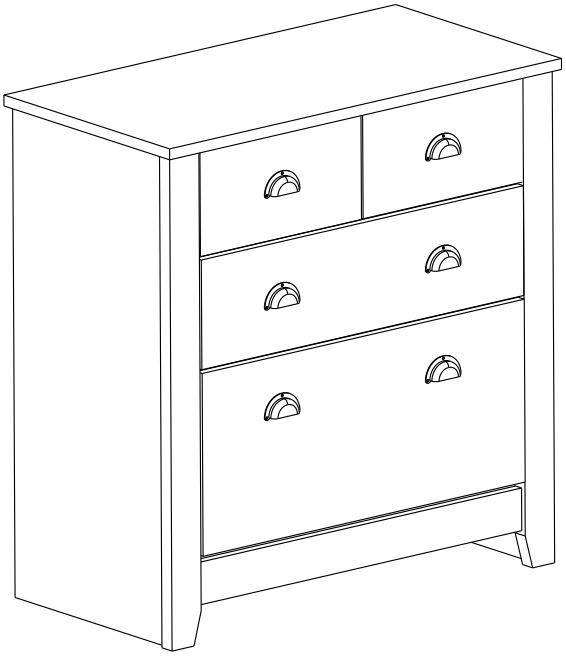

IMPORTANT

FOR DOMESTIC USE ONLY

PLEASE READ BEFORE YOU CONTINUE FURTHER

CARE AND MAINTENANCE

After unpacking this product please keep the original packaging in case it needs to be returned for any reason.
- Please ensure all fittings and parts are present before commencing with assembly.
- Never drag or push products as this could cause damage to the joints making it inferior.
- We strongly recommend that you keep children away from your work area.
- We recommend that you lay a blanket or sheet on the floor to avoid damage to both your floor and the product.
- Assemble this product as close to its final position as possible.
- Do not place this product next to a radiator or in direct sunlight.
- Do not drag or push items across your high gloss furniture as this may cause the surface to scratch
- Wood is a natural product and may expand if subjected to damp and may shrink or crack if subjected to heat. Therefore it is recommended that room temperature is maintained, with no sudden temperature fluctuations.
- Make sure any spillage is wiped off immediately.
- Do not place hot or chilled items directly on to the surface, use a place mat or marking will occur.
- For general cleaning use a soft cotton or micro fibre cloth, and do not use detergents of any kind.
- From time to time it may be necessary to tighten fittings, regular inspections should be carried out.
- Do not place on a wet or damp floor as staining may occur to your floor.

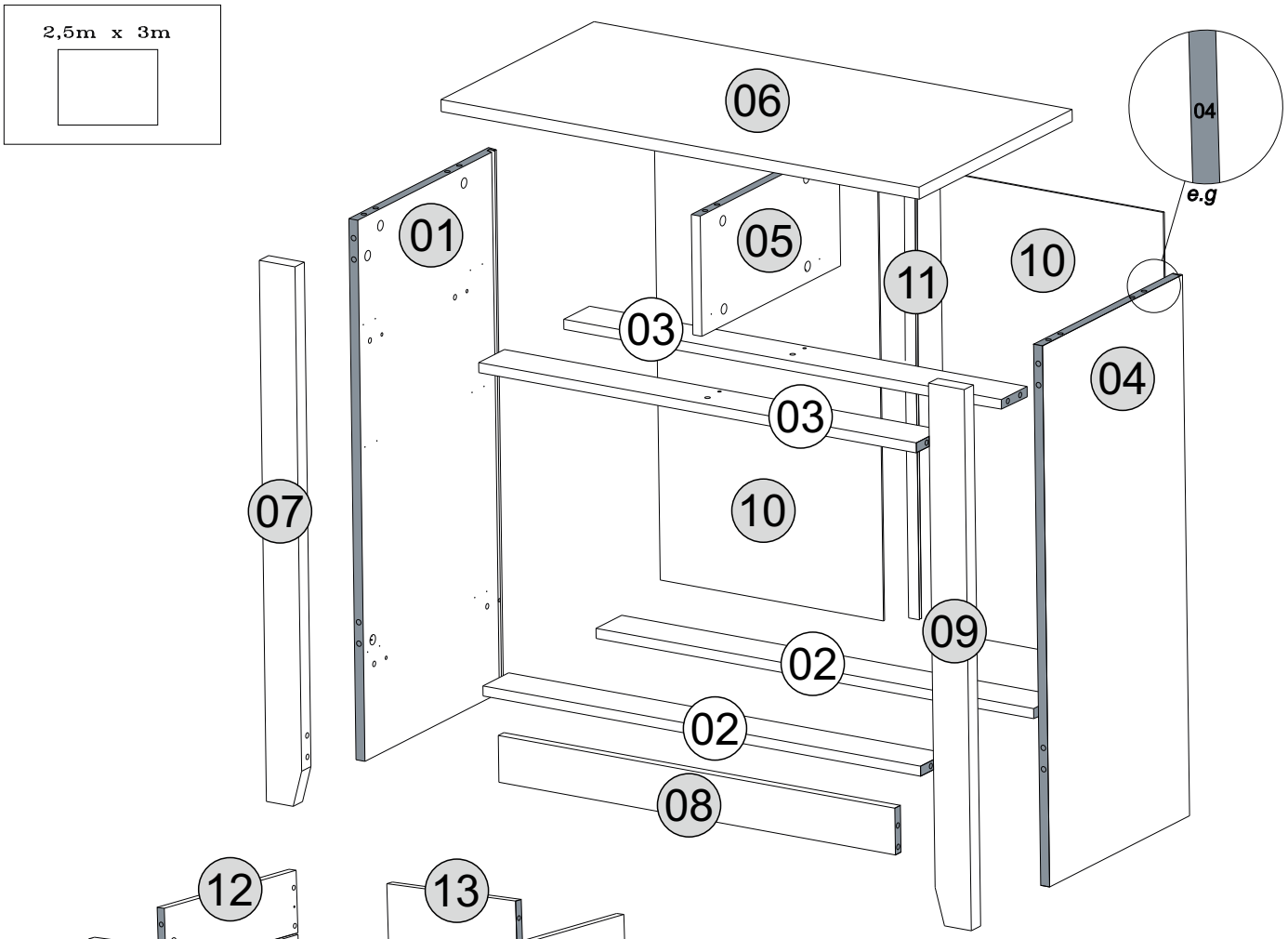

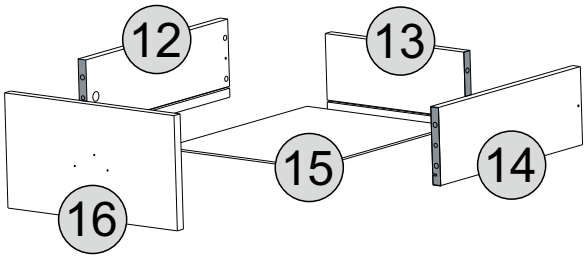

TOOLS REQUIRED

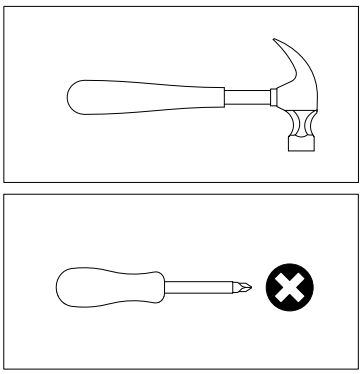

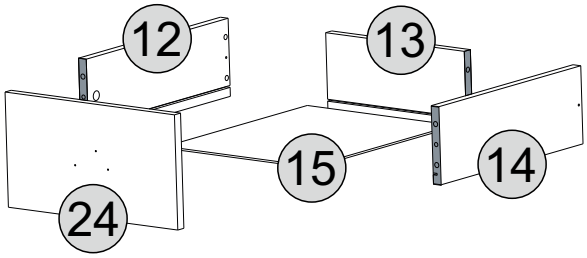

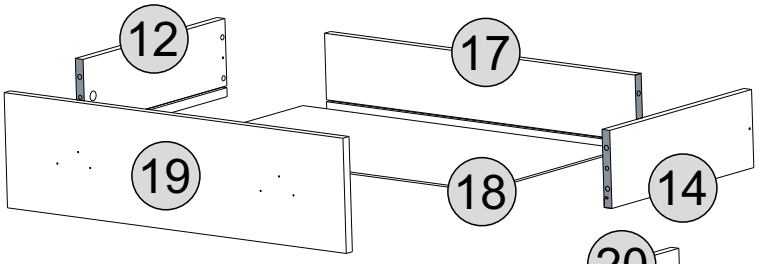

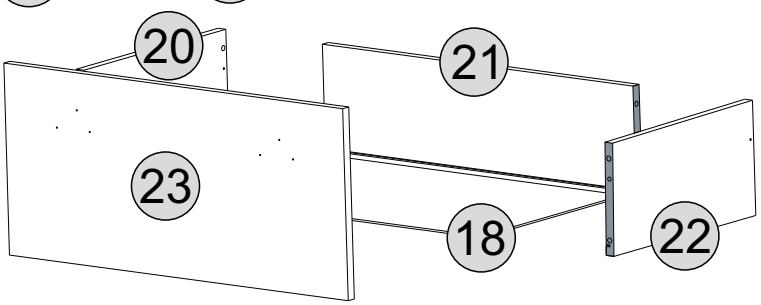

Please Note:
The below parts have been stamped with the part number to help identiy them during assembly.

PARTS LIST

Part Number	Part Code	Part Description	Quantity	Carton
01	S100-102-076-DV1-01	Left Side Panel	1	1/1
02	S100-102-076-DV1-02	Bottom Crossbeam	2	1/1
03	S100-102-076-DV1-03	Upper Crossbeam	2	1/1
04	S100-102-076-DV1-04	Right Side Panel	1	1/1
05	S100-102-076-DV1-05	Dividing Panel	1	1/1
06	S100-102-076-DV1-06	Top	1	1/1
07	S100-102-076-DV1-07	Front Left Upright	1	1/1
08	S100-102-076-DV1-08	Plinth	1	1/1
09	S100-102-076-DV1-09	Front Right Upright	1	1/1
10	S100-102-076-DV1-10	Back Panel	2	1/1
11	S100-102-076-DV1-11	Back Panel Strip	1	1/1
12	S100-102-076-DV1-12	Left Drawer Side	3	1/1
13	S100-102-076-DV1-13	Drawer Back	2	1/1
14	S100-102-076-DV1-14	Right Drawer Side	3	1/1
15	S100-102-076-DV1-15	Drawer Base	2	1/1
16	S100-102-076-DV1-16	Left Drawer Front	1	1/1
17	S100-102-076-DV1-17	Drawer Back	1	1/1
18	S100-102-076-DV1-18	Drawer Base	2	1/1
19	S100-102-076-DV1-19	Drawer Front	1	1/1
20	S100-102-076-DV1-20	Left Drawer Side	1	1/1
21	S100-102-076-DV1-21	Drawer Back	1	1/1
22	S100-102-076-DV1-22	Right Drawer Side	1	1/1
23	S100-102-076-DV1-23	Drawer Front	1	1/1
24	S100-102-076-DV1-24	Right Drawer Front	1	1/1

FITTINGS LIST

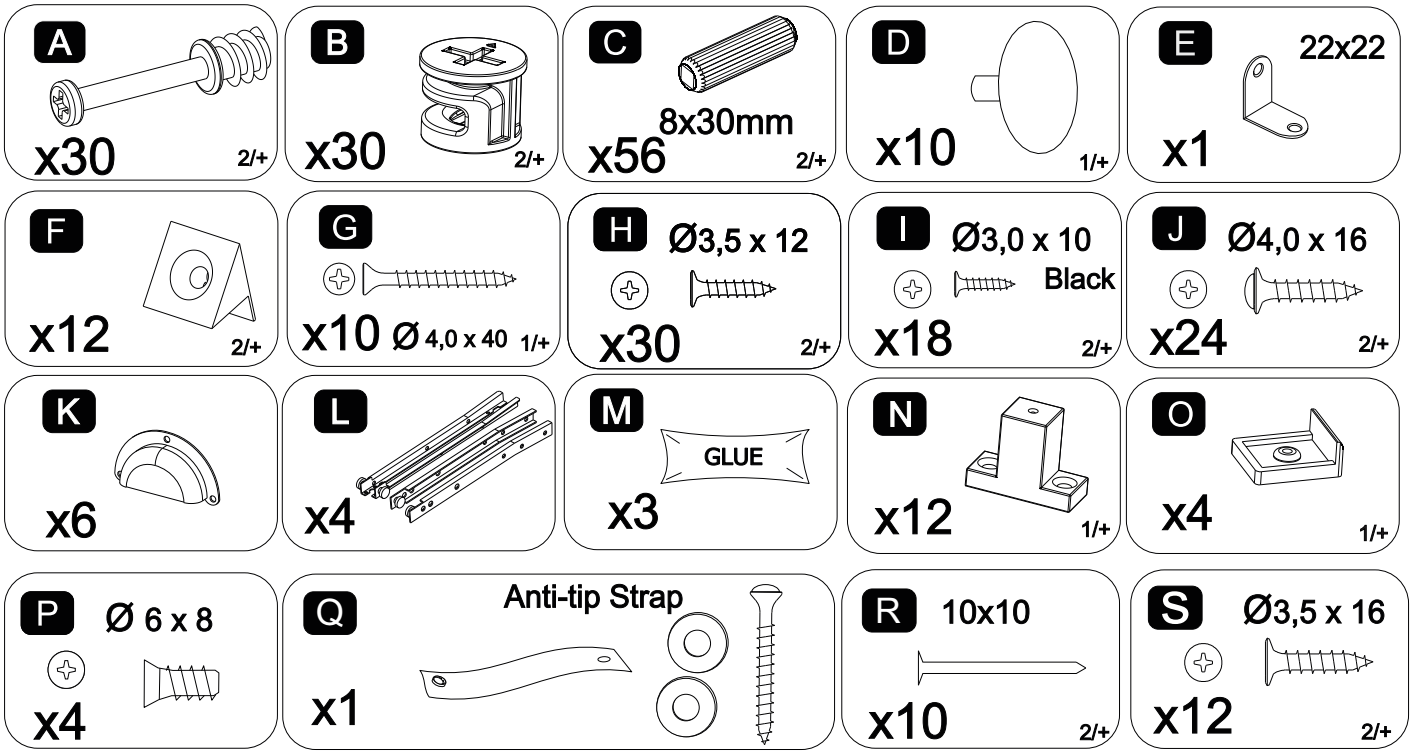

TIPS FOR FITTING CAM-LOCKS

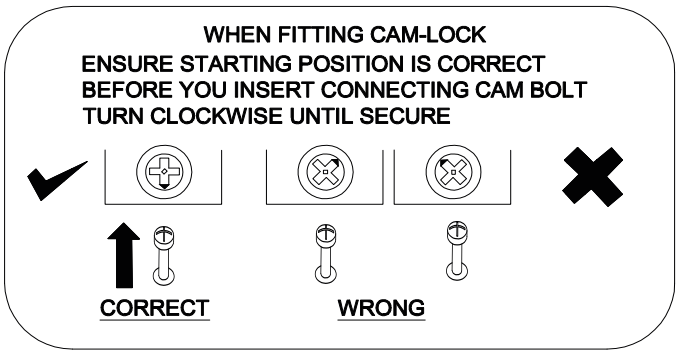

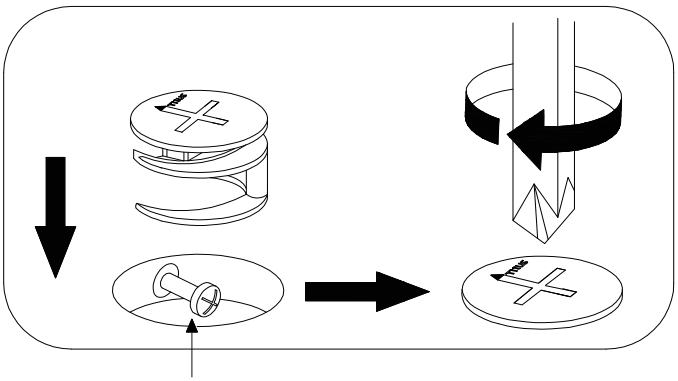

Cam bolt head needs to be in centre

CAMBOLT

Tighten until shoulder is flush with panel. Do not overtighten or undertighten (see example below)

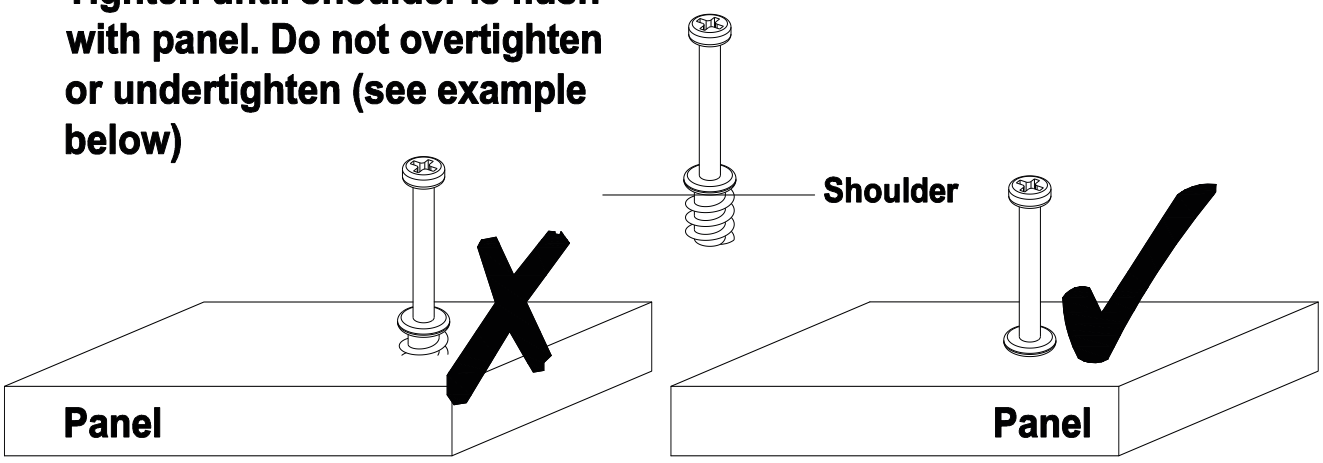

STEP 1

PARTS REQUIRED

01 -LEFT SIDE PANEL	x1
04 -RIGHT SIDE PANEL	x1

HARDWARE REQUIRED

C	Ø8 x 30mm	08
M	GLUE	01

TOOLS REQUIRED

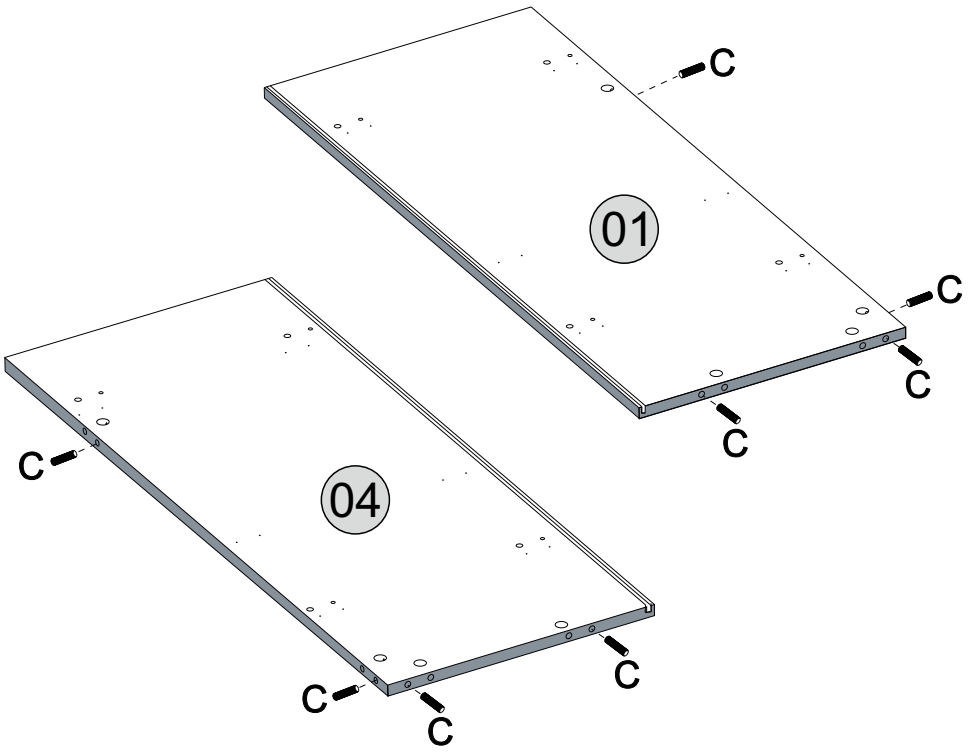

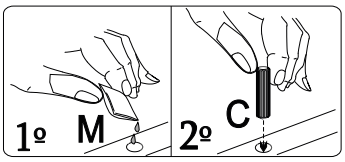

Glue must be added to the dowel holes on part 01 and 04.

STEP 2

PARTS REQUIRED

02 -BOTTOM CROSSBEAM	x2
03 -UPPER CROSSBEAM	x2
05 -DIVIDING PANEL	x1

HARDWARE REQUIRED

A		02
C	Ø8 x 30mm	12
M	GLUE	01

TOOLS REQUIRED

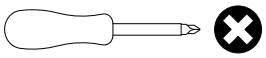

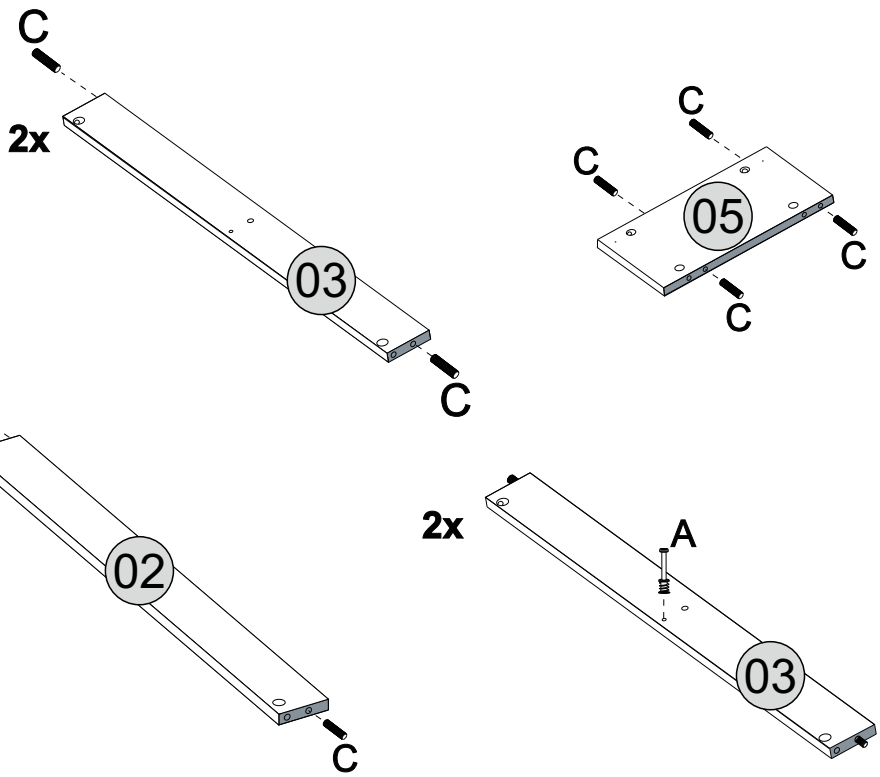

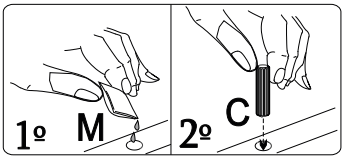

Glue must be added to the dowel holes on part 02, 03 and 05.

STEP 3

PARTS REQUIRED

01 -LEFT SIDE PANEL	x1

HARDWARE REQUIRED

J	Ø4,0 x 16	12
N		06

TOOLS REQUIRED

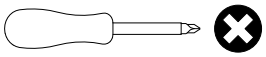

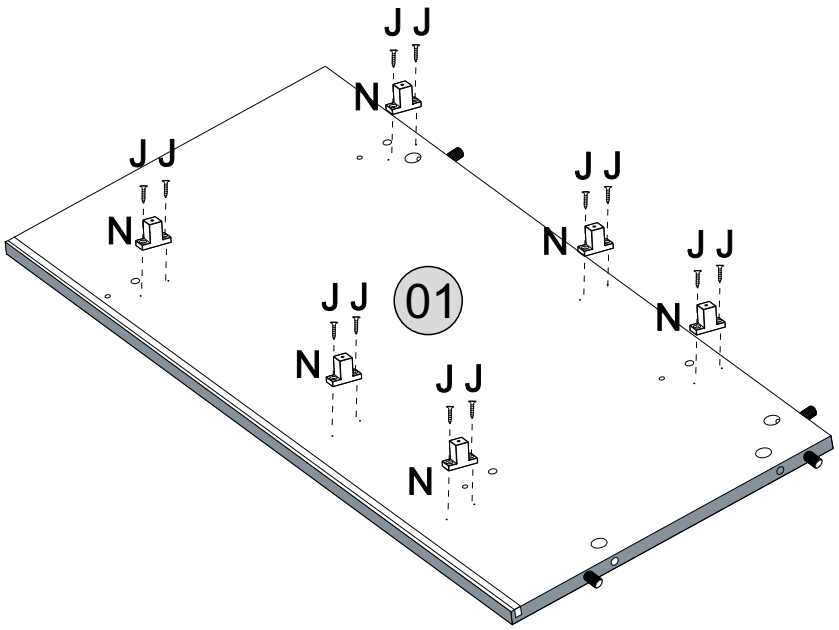

STEP 4

PARTS REQUIRED

01 -LEFT SIDE PANEL	x1

HARDWARE REQUIRED

A		04
O		02
R		02

TOOLS REQUIRED

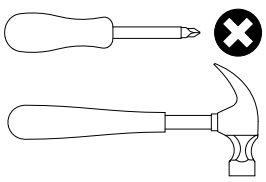

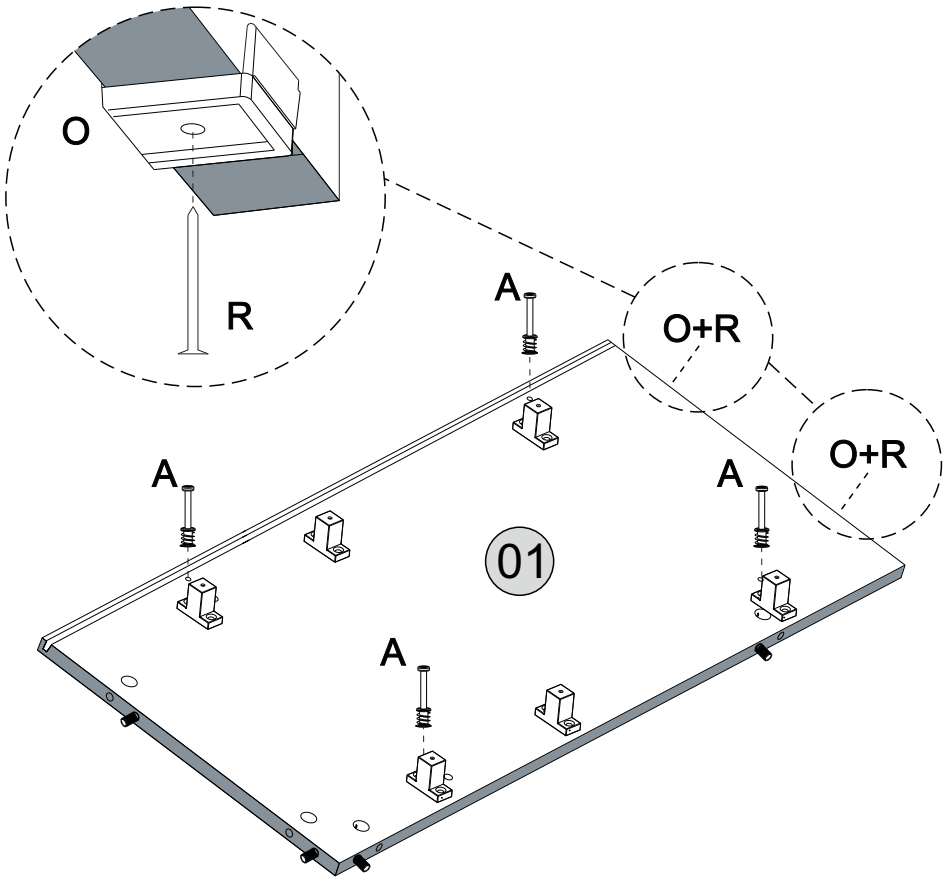

STEP 5

PARTS REQUIRED

01 -LEFT SIDE PANEL	x1

HARDWARE REQUIRED

H	3,5 x 12	06
L		03

TOOLS REQUIRED

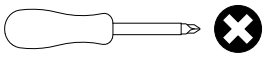

To Assemble the Drawer Slide, Please Follow Step as Below

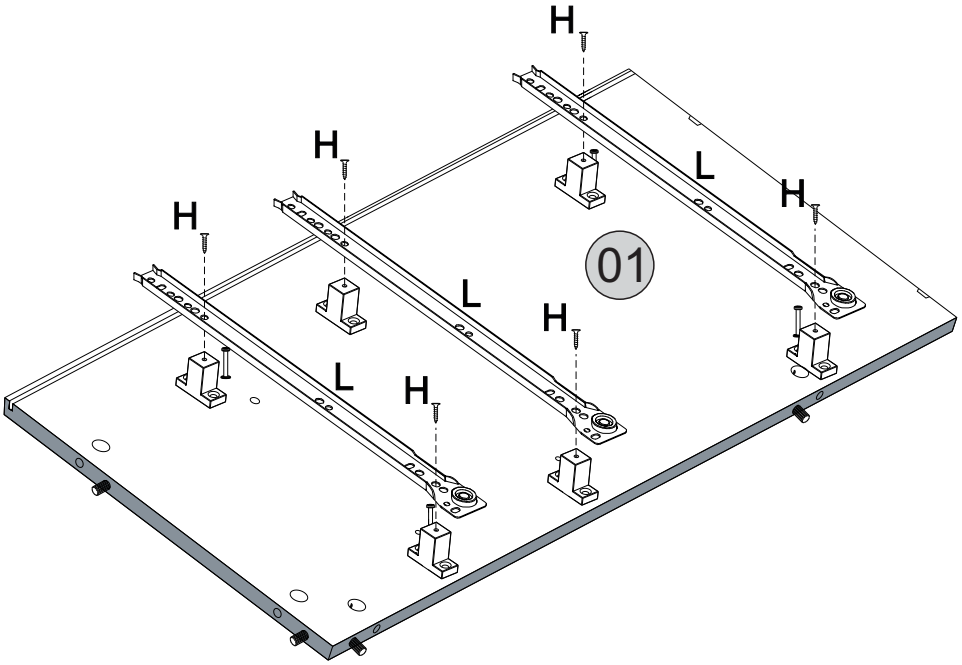

STEP 6

PARTS REQUIRED

04 -RIGHT SIDE PANEL	x1

HARDWARE REQUIRED

J	Ø4,0 x 16	12
N		06

TOOLS REQUIRED

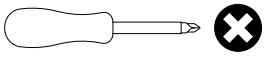

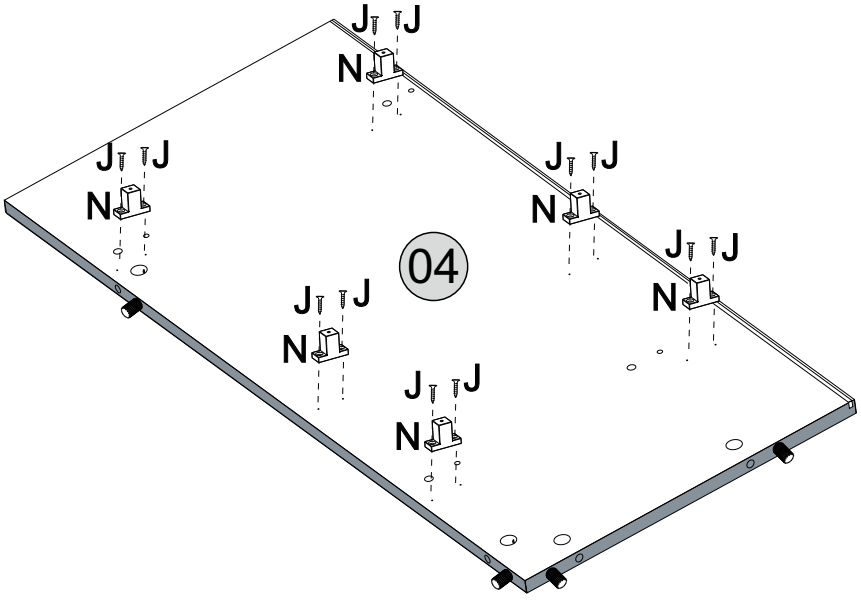

STEP 7

PARTS REQUIRED

04 -RIGHT SIDE PANEL	x1

HARDWARE REQUIRED

A	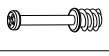	04
O		02
R		02

TOOLS REQUIRED

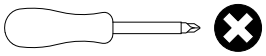

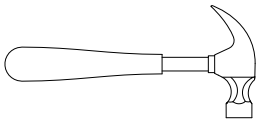

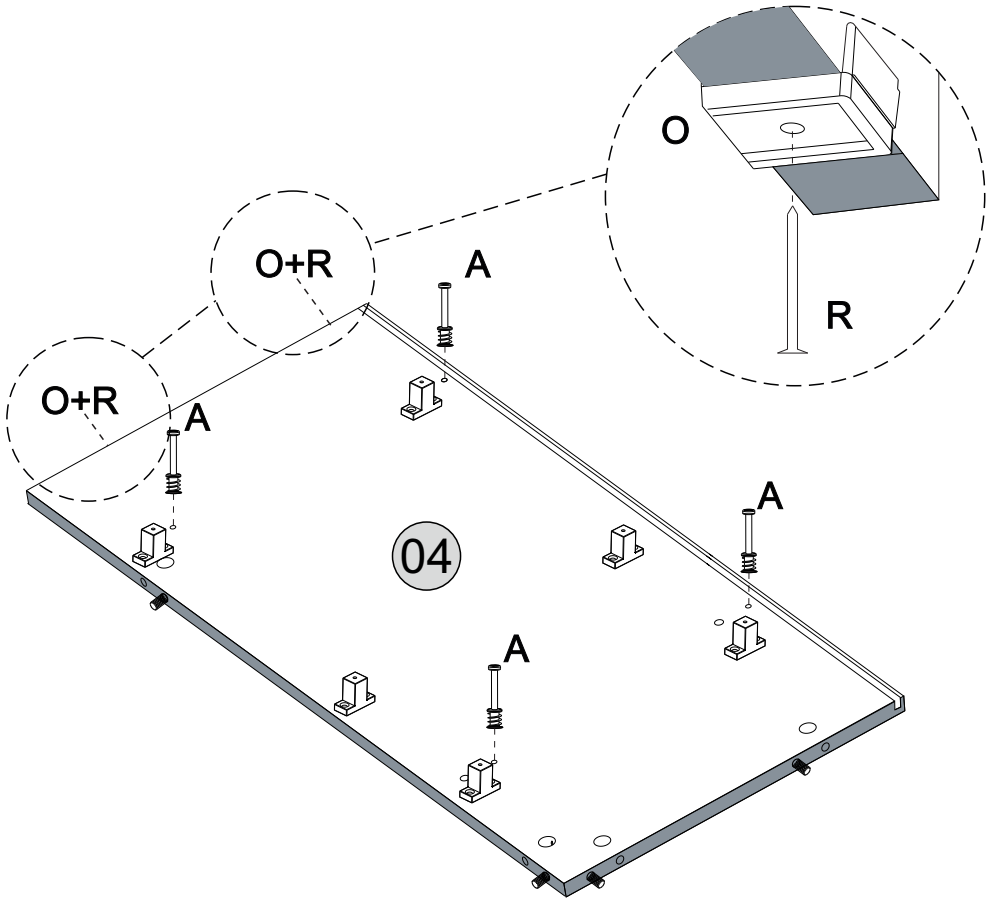

STEP 8

PARTS REQUIRED

04 -RIGHT SIDE PANEL	x1

HARDWARE REQUIRED

H	3,5 x 12	06
L		03

TOOLS REQUIRED

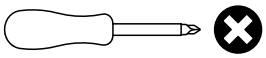

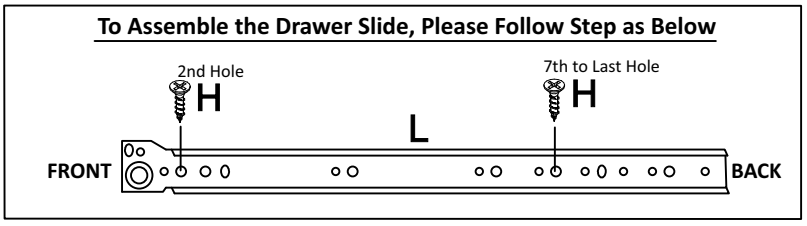

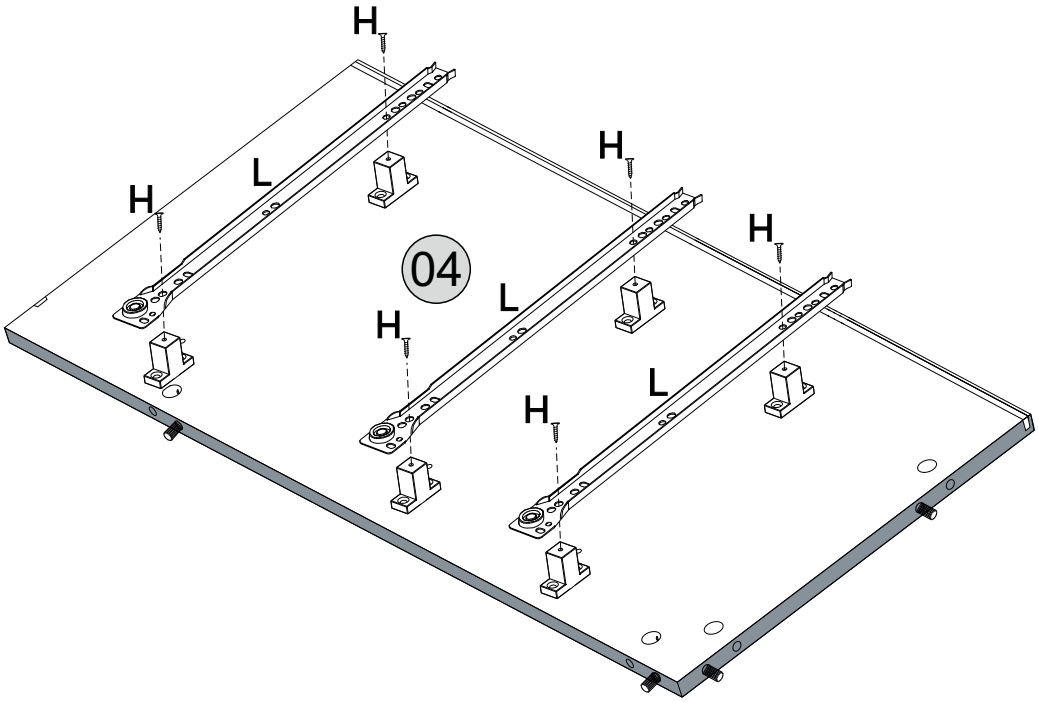

STEP 9

PARTS REQUIRED

01 -LEFT SIDE PANEL	x1
02 -BOTTOM CROSSBEAM	x2
03 -UPPER CROSSBEAM	x2
04 -RIGHT SIDE PANEL	x1

HARDWARE REQUIRED

B		08
M	GLUE	01

TOOLS REQUIRED

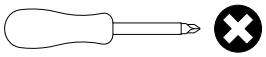

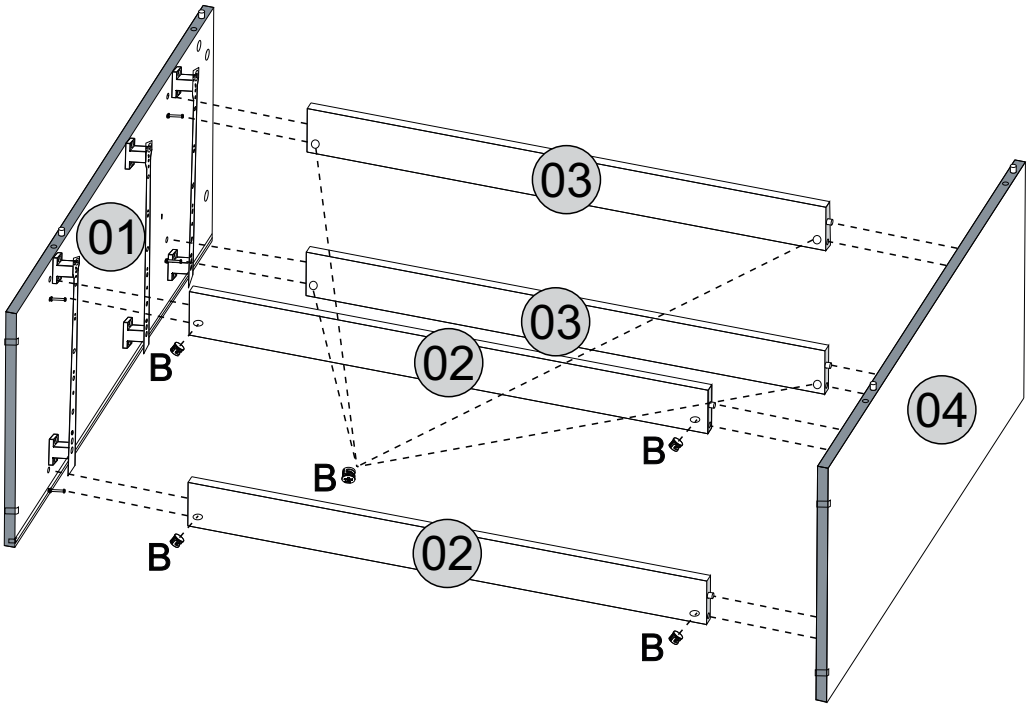

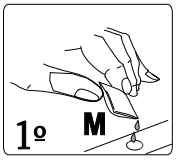

Glue must be added to the dowel holes on part 01 and 04.

Please refer to page 03 on how to use cams correctly.

STEP 10

PARTS REQUIRED

05- DIVIDING PANEL	x1

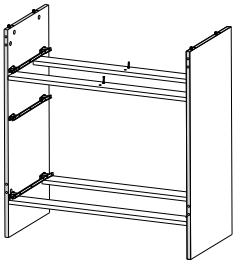

HARDWARE REQUIRED

B		02
M	GLUE	01

TOOLS REQUIRED

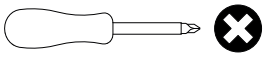

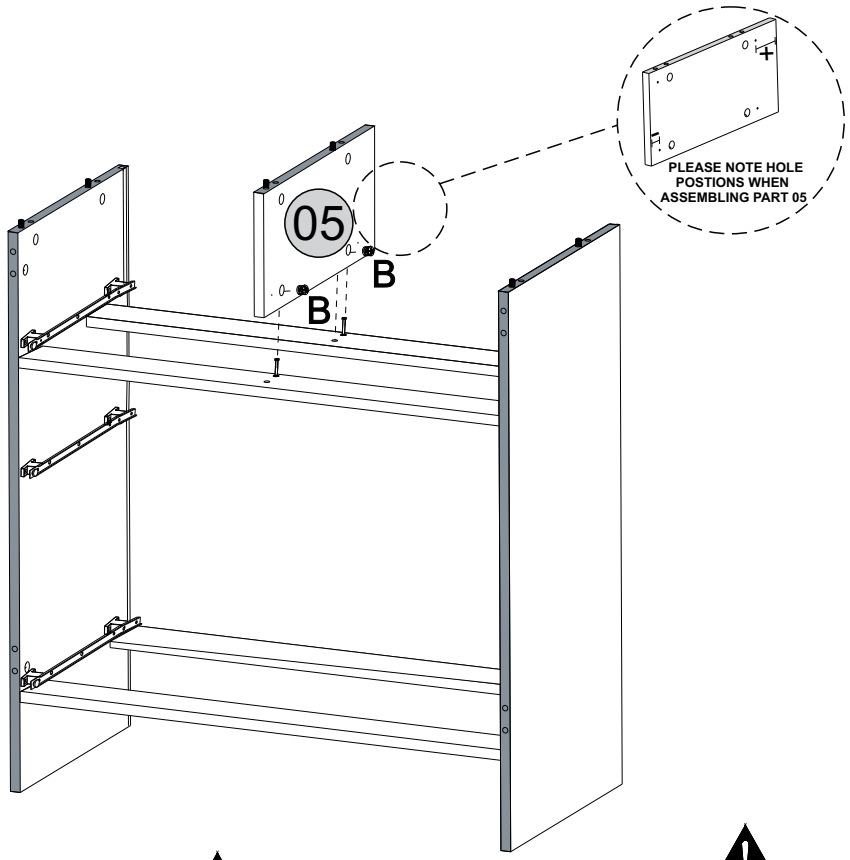

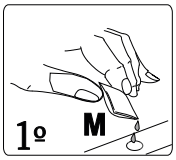

Glue must be added to the dowel holes on part 03.

Please refer to page 03 on how to use cams correctly.

STEP 11

PARTS REQUIRED

05 -DIVIDING PANEL	x1

HARDWARE REQUIRED

L		02
P	Ø 6 x 8	04

TOOLS REQUIRED

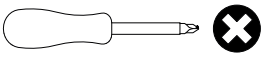

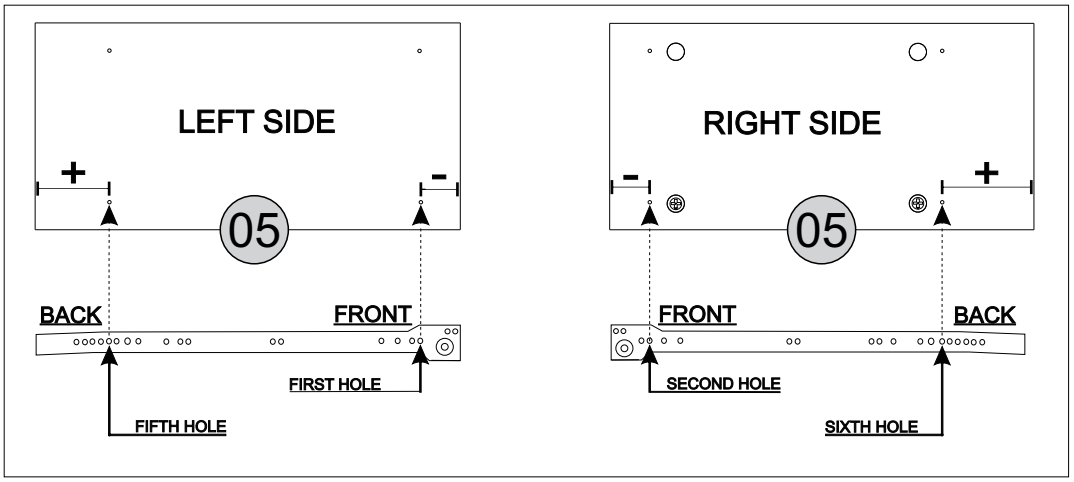

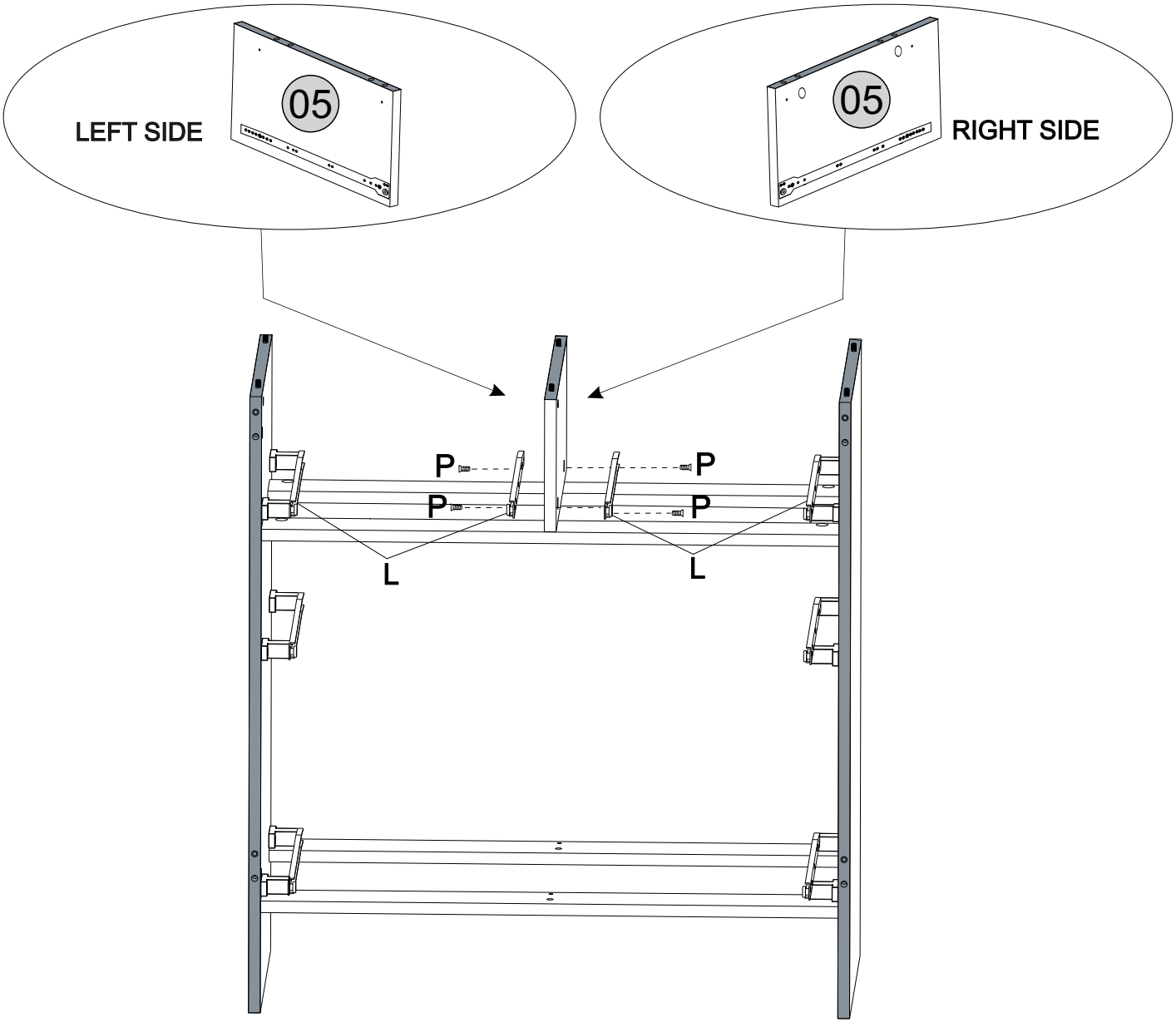

STEP 12

PARTS REQUIRED

06 -TOP	x1

HARDWARE REQUIRED

A	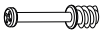	06

TOOLS REQUIRED

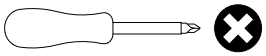

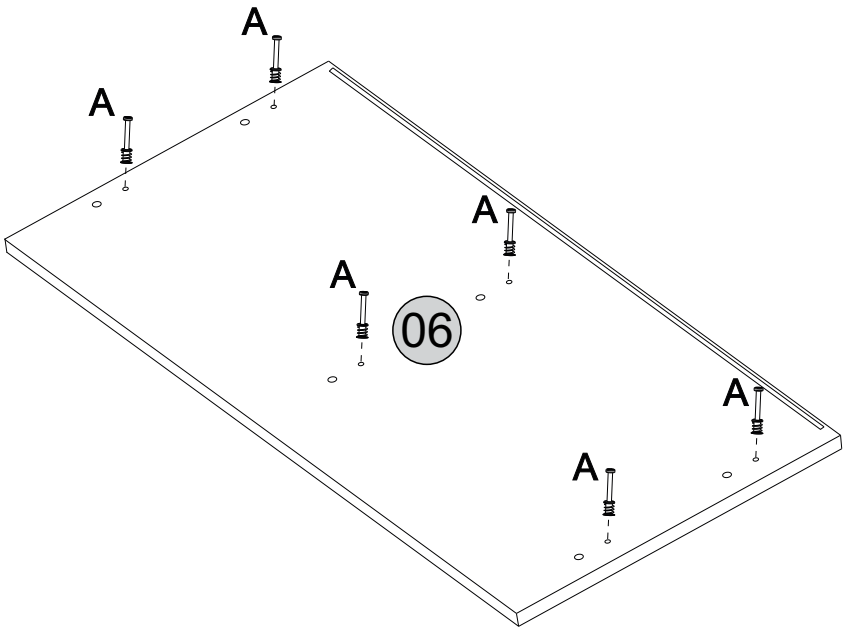

STEP 13

PARTS REQUIRED

06- TOP	x1

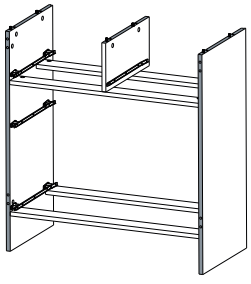

HARDWARE REQUIRED

B		06
M	GLUE	01

TOOLS REQUIRED

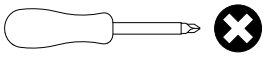

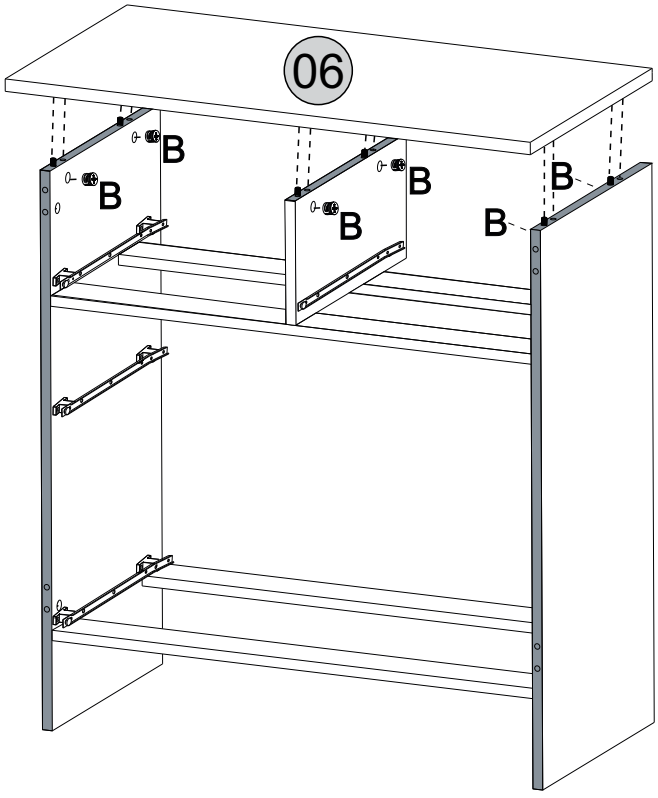

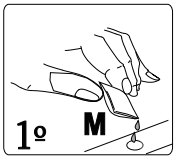

Glue must be added to the dowel holes on part 06.

Please refer to page 03 on how to use cams correctly.

STEP 14

PARTS REQUIRED

07 -FRONT LEFT UPRIGHT	x1
08 -PLINTH	x1
09 -FRONT RIGHT UPRIGHT	x1

HARDWARE REQUIRED

A		04
C	Ø8 x 30mm	04
M	GLUE	01

TOOLS REQUIRED

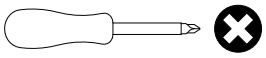

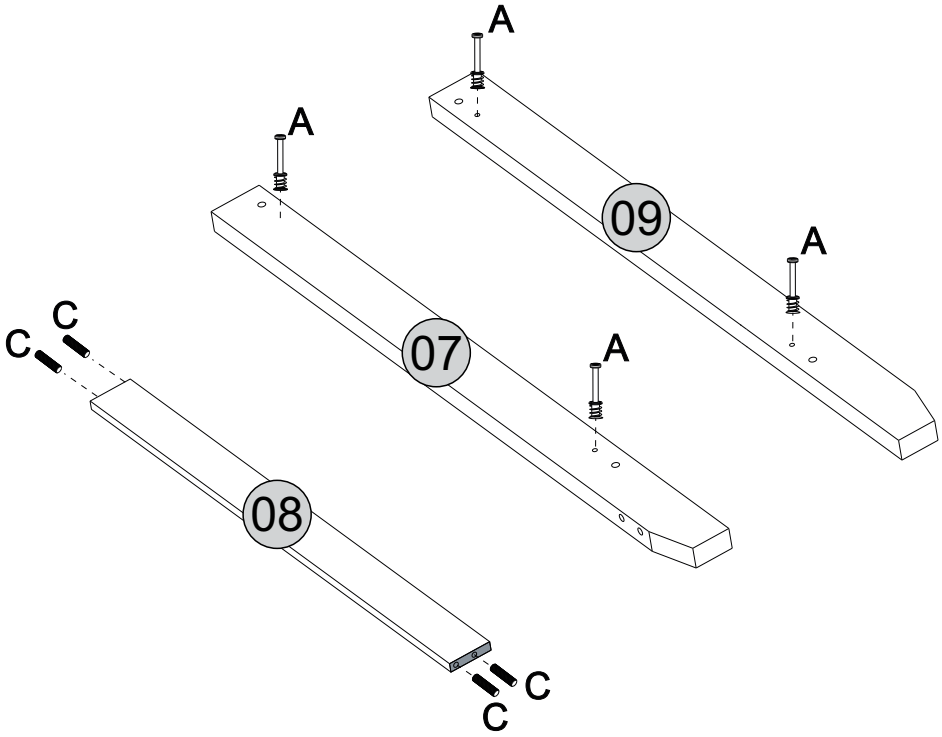

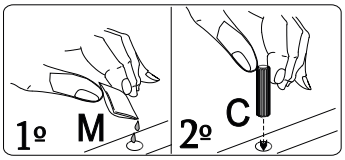

Glue must be added to the dowel holes on part 08.

STEP 15

PARTS REQUIRED

07 - FRONT LEFT UPRIGHT	x1
08 - PLINTH	x1
09 - FRONT RIGHT UPRIGHT	x1

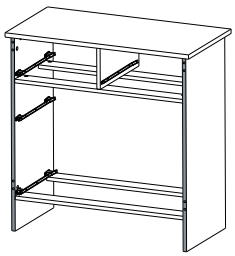

HARDWARE REQUIRED

B		04
E		01
H	Ø 3,5 x 12	02
M	GLUE	01

TOOLS REQUIRED

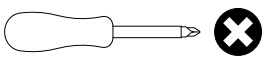

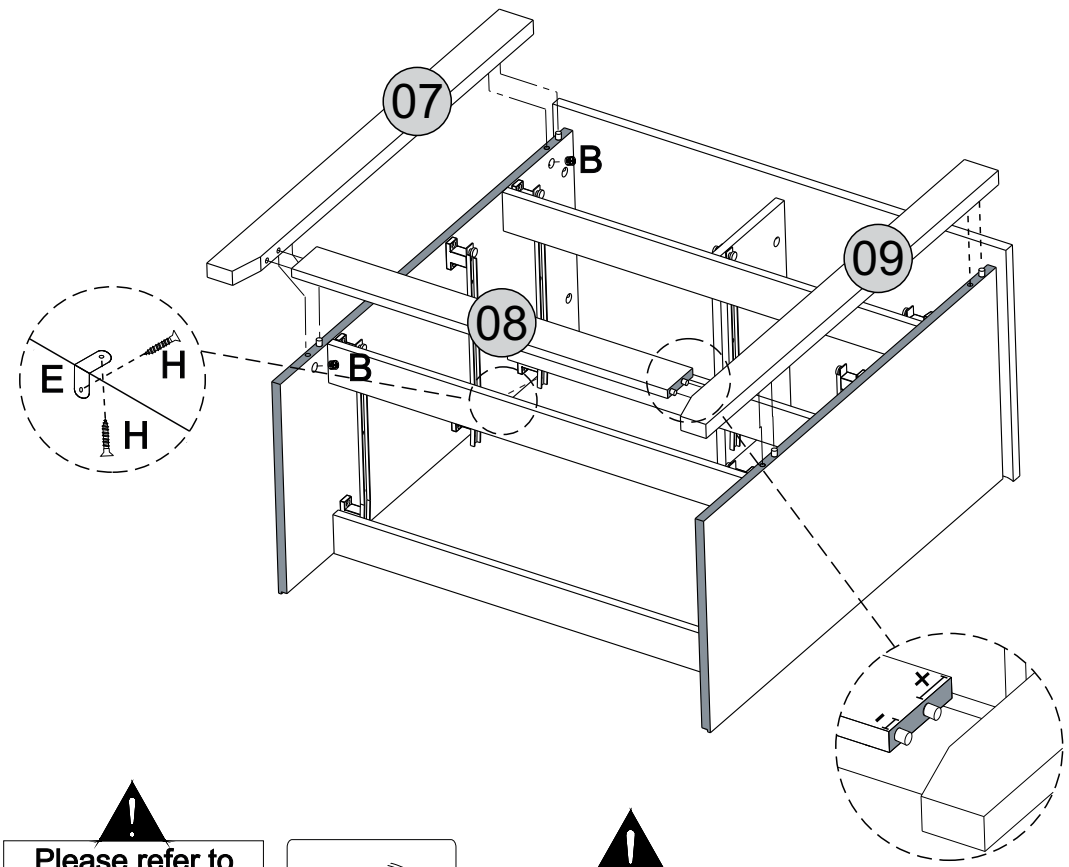

Please refer to page 03 on how to use cams correctly.

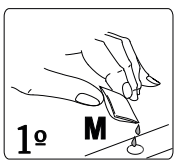

Glue must be added to the dowel holes on part 07 & 09

STEP 16

PARTS REQUIRED

10 - BACK PANEL	x2
11 - BACK PANEL STRIP	x1

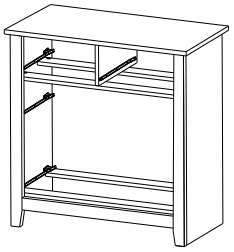

HARDWARE REQUIRED

F		12
R		06
S		12

TOOLS REQUIRED

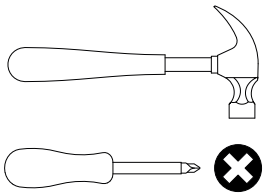

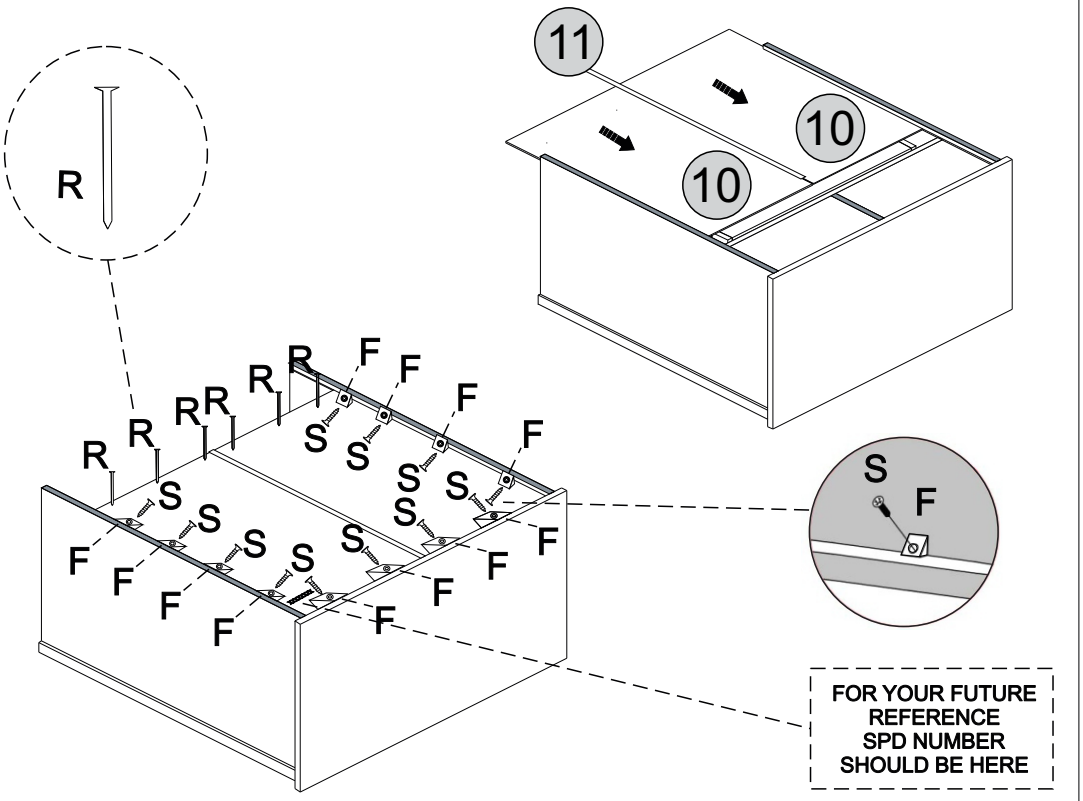

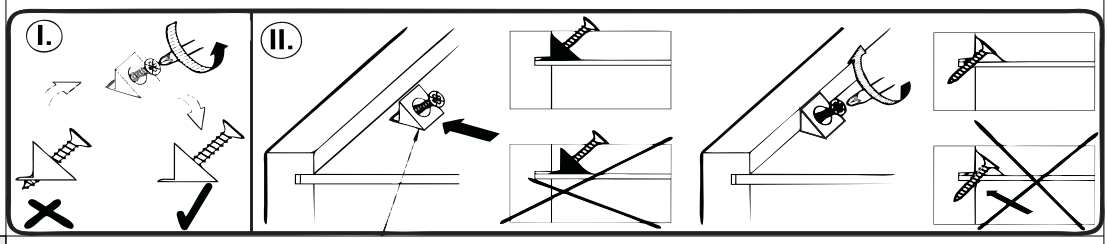

STEP 17

PARTS REQUIRED

12 - LEFT DRAWER SIDE	x3
13 - DRAWER BACK	x2
14 - RIGHT DRAWER SIDE	x3
17 - DRAWER BACK	x1

HARDWARE REQUIRED

C	Ø8 x 30	24
M	GLUE	01

TOOLS REQUIRED

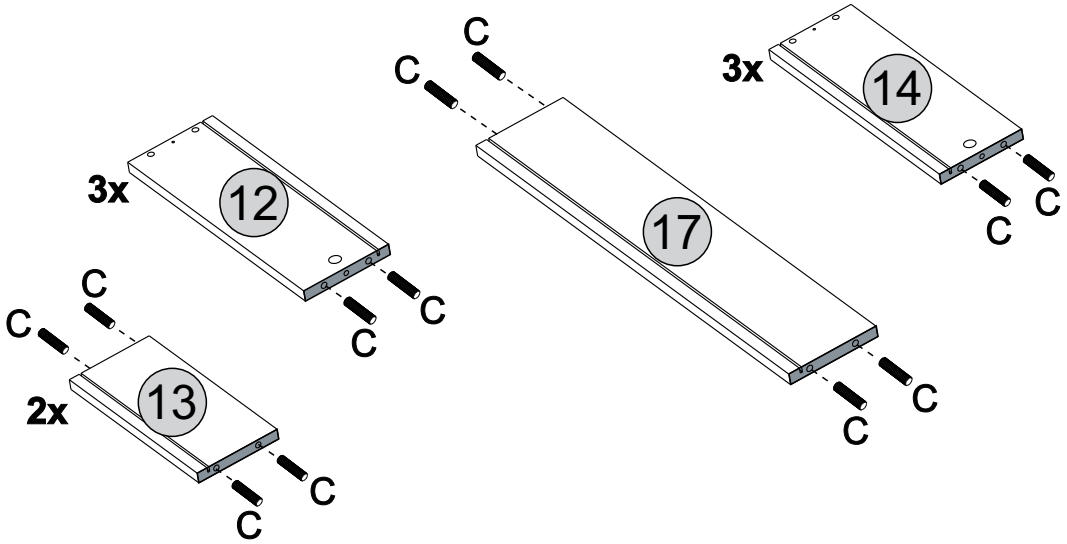

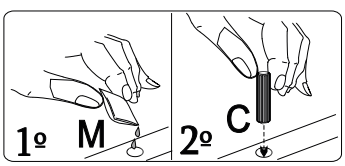

Glue must be added to the dowel holes on part 12,13,14 and 17.

STEP 18

PARTS REQUIRED

16 -LEFT DRAWER FRONT	x1
19 -DRAWER FRONT	x1
24 -RIGHT DRAWER FRONT	x1

HARDWARE REQUIRED

A	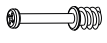	06

TOOLS REQUIRED

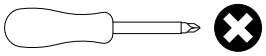

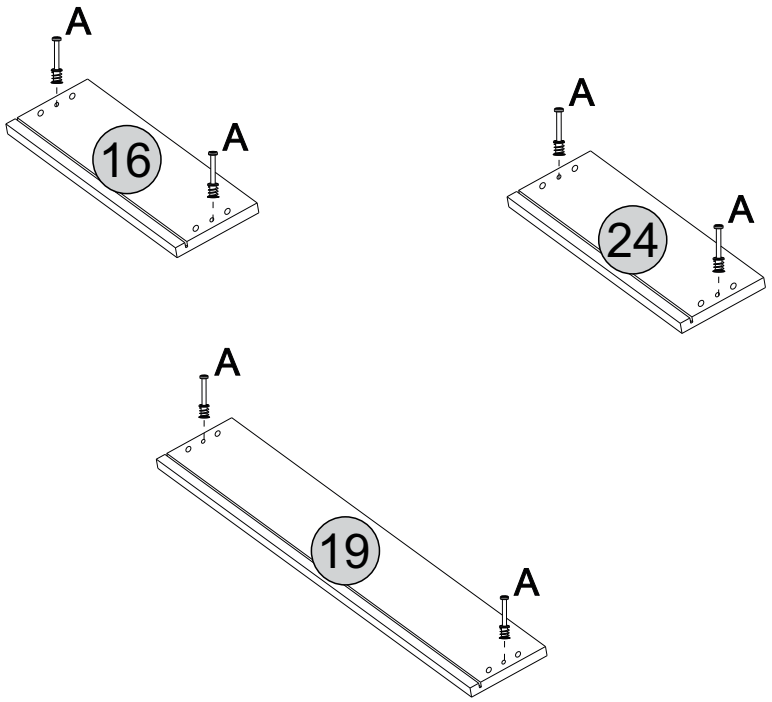

STEP 19

PARTS REQUIRED

12 -LEFT DRAWER SIDE	x2
13 -DRAWER BACK	x2
14 -RIGHT DRAWER SIDE	x2

HARDWARE REQUIRED

G	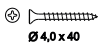 Ø 4,0 x 40	04

TOOLS REQUIRED

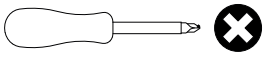

2x

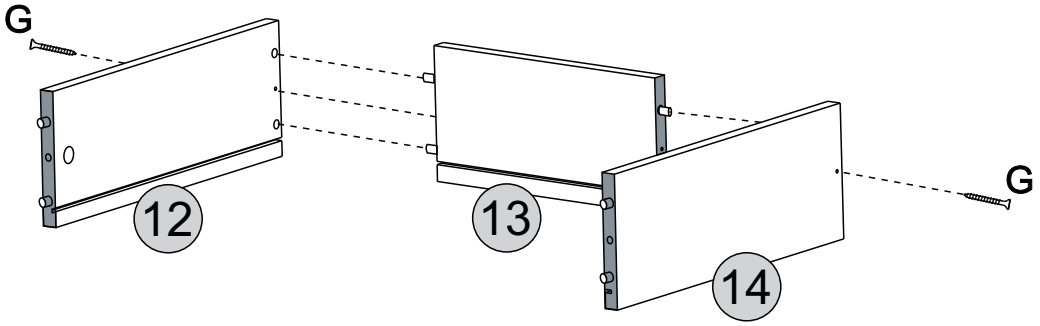

STEP 20

PARTS REQUIRED

15 - DRAWER BASE	x2
16 - LEFT DRAWER FRONT	x1
24 - RIGHT DRAWER FRONT	x1

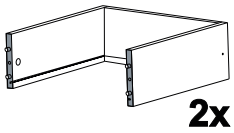

HARDWARE REQUIRED

B		04
I	Ø3,0 x 10 Black	06
K		02

TOOLS REQUIRED

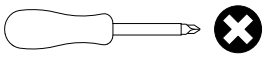

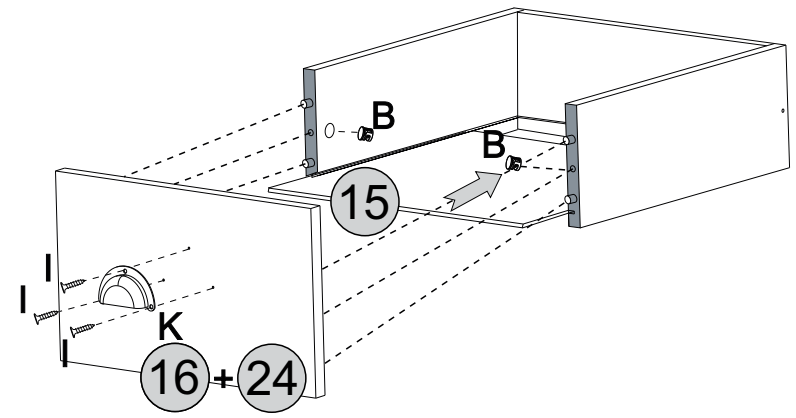

STEP 21

PARTS REQUIRED

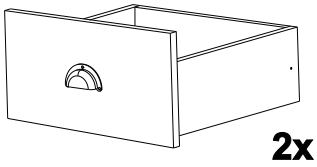

HARDWARE REQUIRED

D		04
H	Ø3,5 x 12	08
L		02

TOOLS REQUIRED

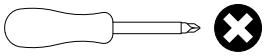

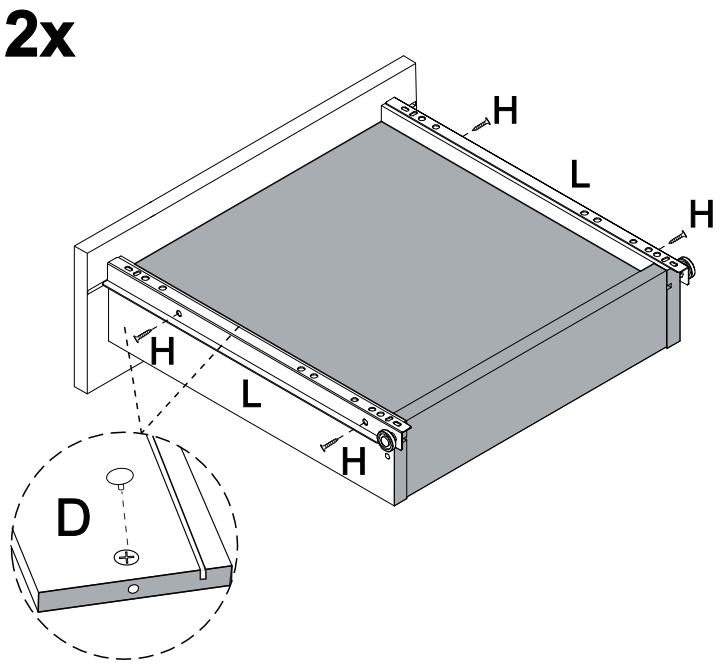

STEP 22

PARTS REQUIRED

12 - LEFT DRAWER SIDE	x1
14 - RIGHT DRAWER SIDE	x1
17 - DRAWER BACK	x1

HARDWARE REQUIRED

G	Ø 4,0 x 40	02

TOOLS REQUIRED

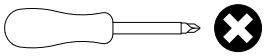

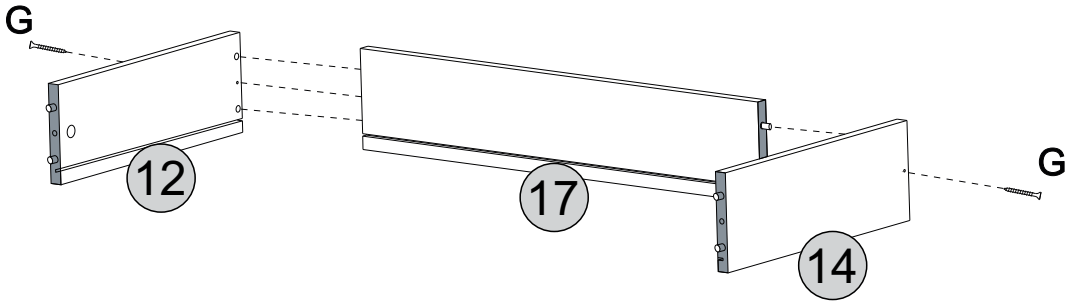

STEP 23

PARTS REQUIRED

18 - DRAWER BASE	x1
19 - DRAWER FRONT	x1

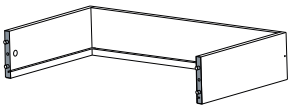

HARDWARE REQUIRED

B		02
I	Ø3,0 x 10 Black	06
K		02

TOOLS REQUIRED

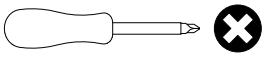

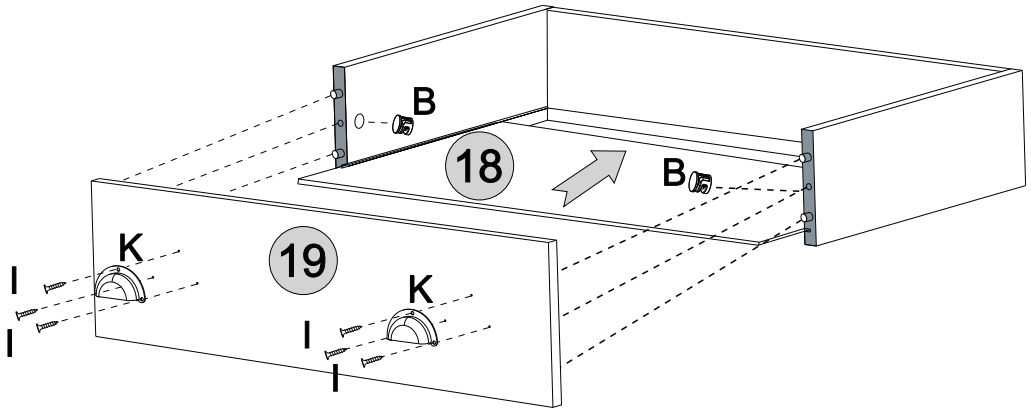

STEP 24

PARTS REQUIRED

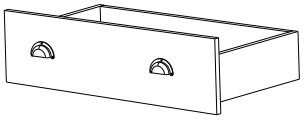

HARDWARE REQUIRED

D		02
H	Ø3,5 x 12	04
L		02

TOOLS REQUIRED

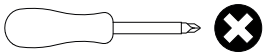

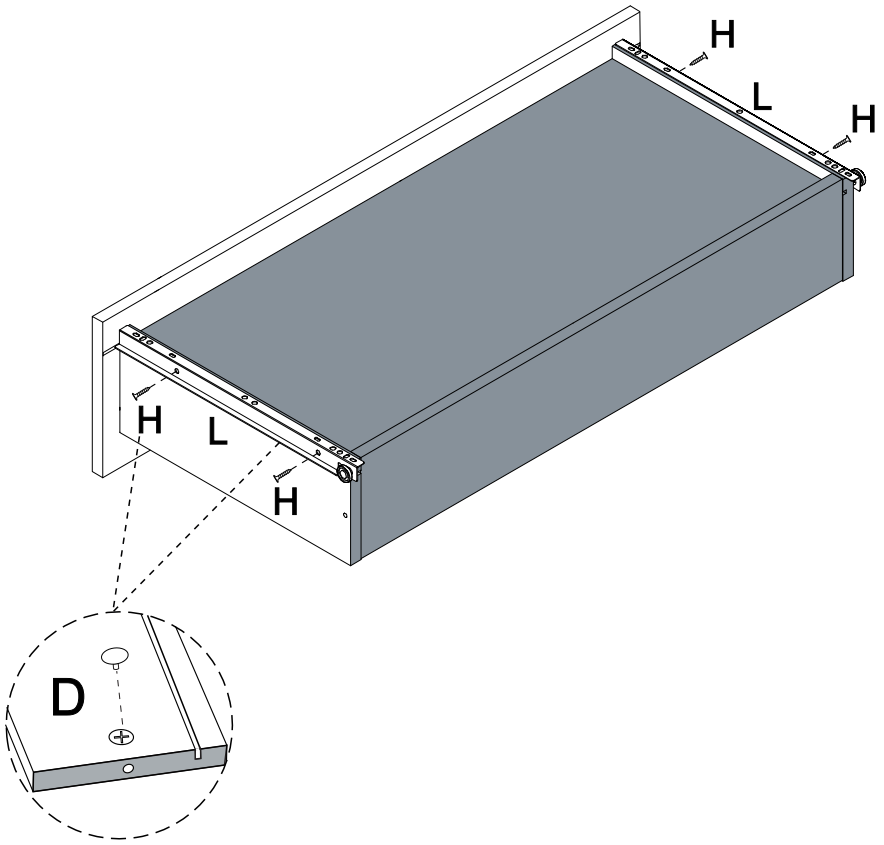

STEP 25

PARTS REQUIRED

20 - LEFT DRAWER SIDE	x1
21 - DRAWER BACK	x1
22 - RIGHT DRAWER SIDE	x1
23 - DRAWER FRONT	x1

HARDWARE REQUIRED

A	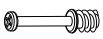	04
C	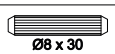 Ø8 x 30	08
M	GLUE	01

TOOLS REQUIRED

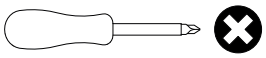

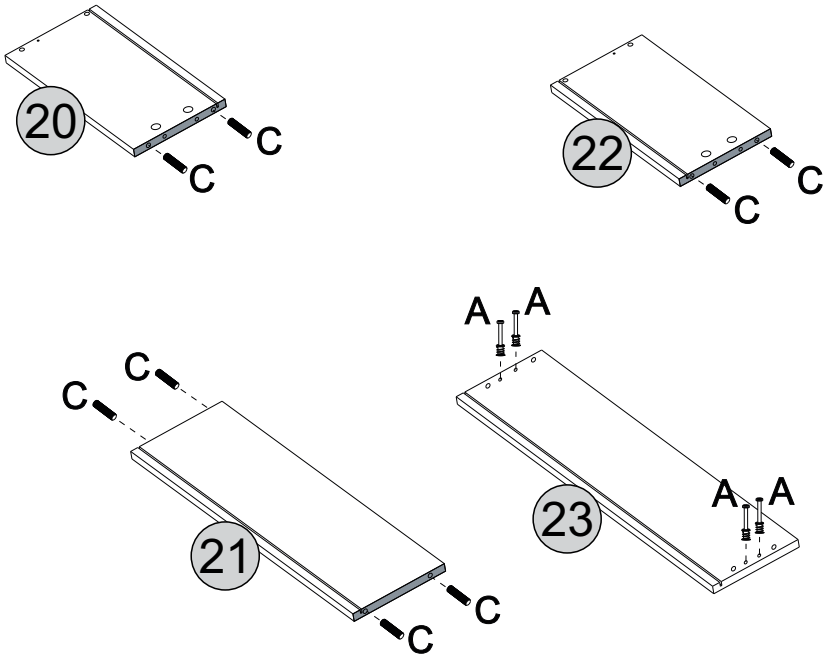

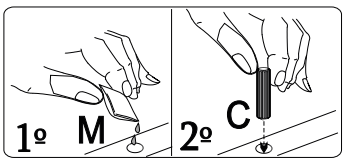

Glue must be added to the dowel holes on part 20,21 and 22.

STEP 26

PARTS REQUIRED

20 - LEFT DRAWER SIDE	x1
21- DRAWER BACK	x1
22 - RIGHT DRAWER SIDE	x1

HARDWARE REQUIRED

G	Ø 4,0 x 40	04

TOOLS REQUIRED

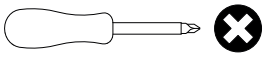

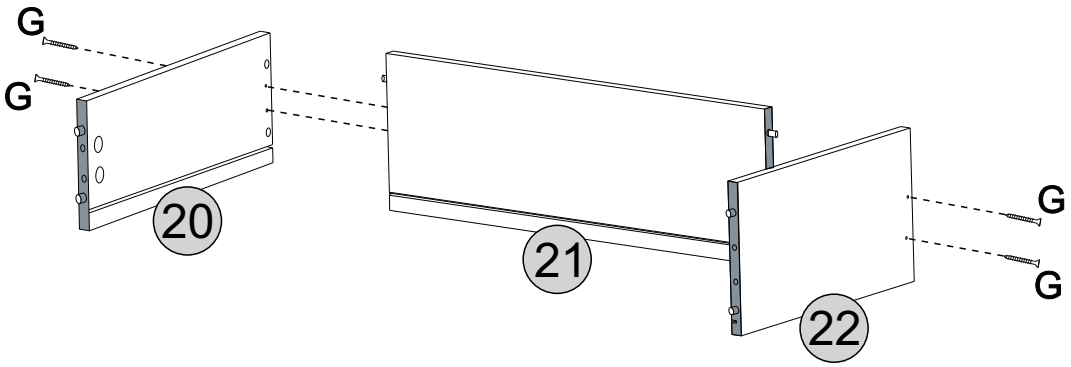

STEP 27

PARTS REQUIRED

18 - DRAWER BASE	x1
23 - DRAWER FRONT	x1

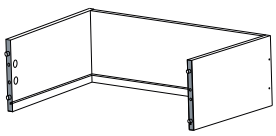

HARDWARE REQUIRED

B		04
I	Ø3,0 x 10 Black	06
K		02

TOOLS REQUIRED

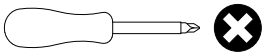

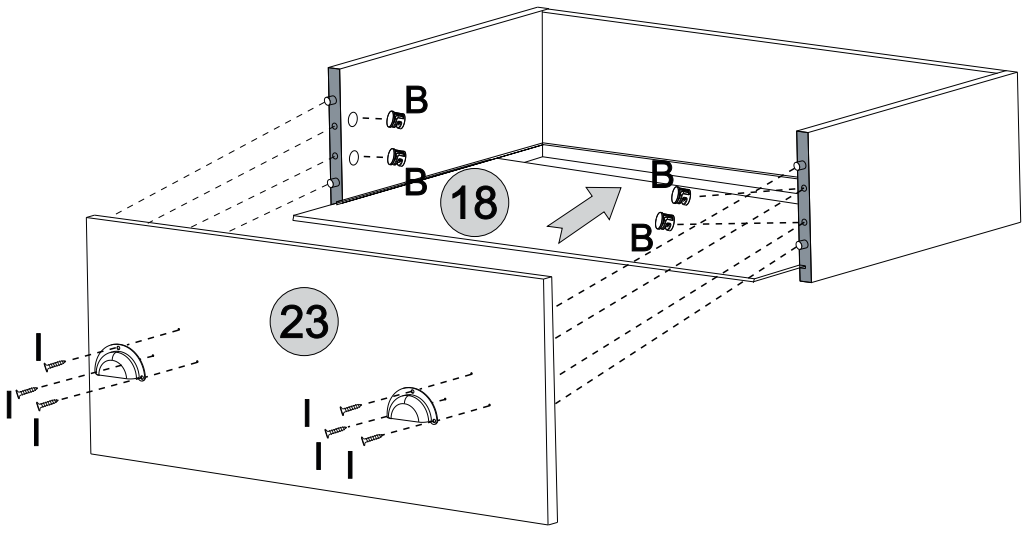

STEP 28

PARTS REQUIRED

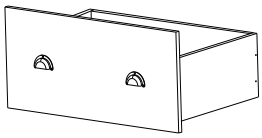

HARDWARE REQUIRED

D		04
H	Ø3,5 x 12	04
L		02

TOOLS REQUIRED

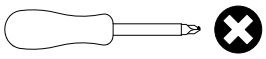

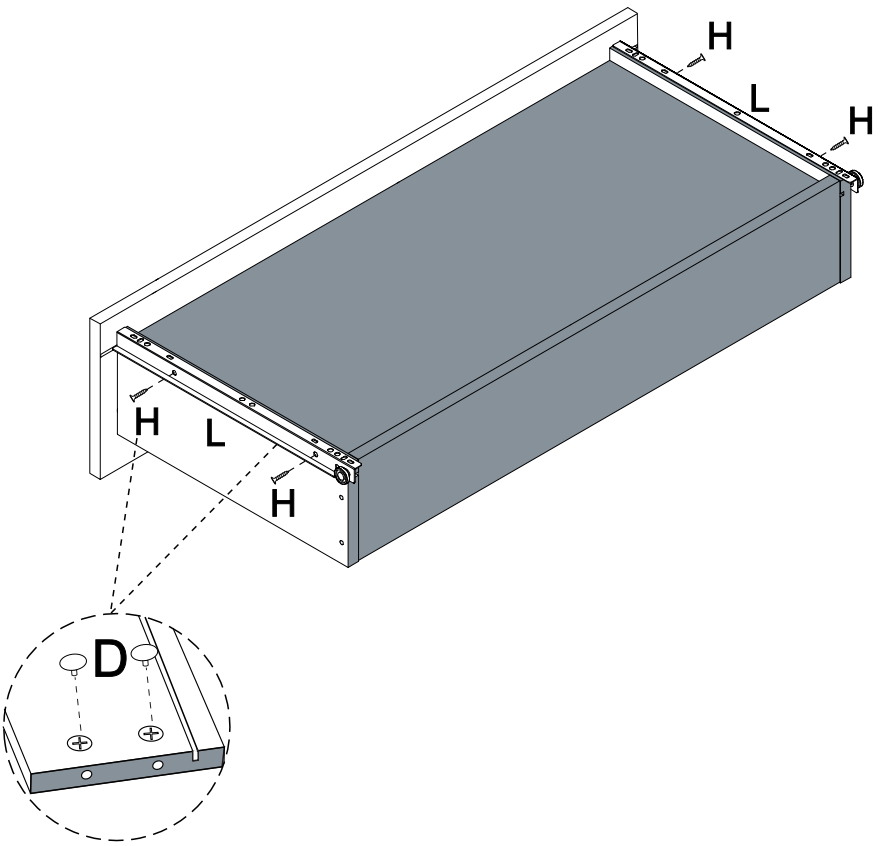

STEP 29

PARTS REQUIRED

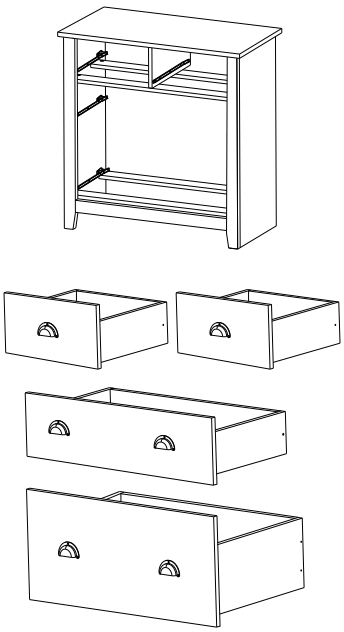

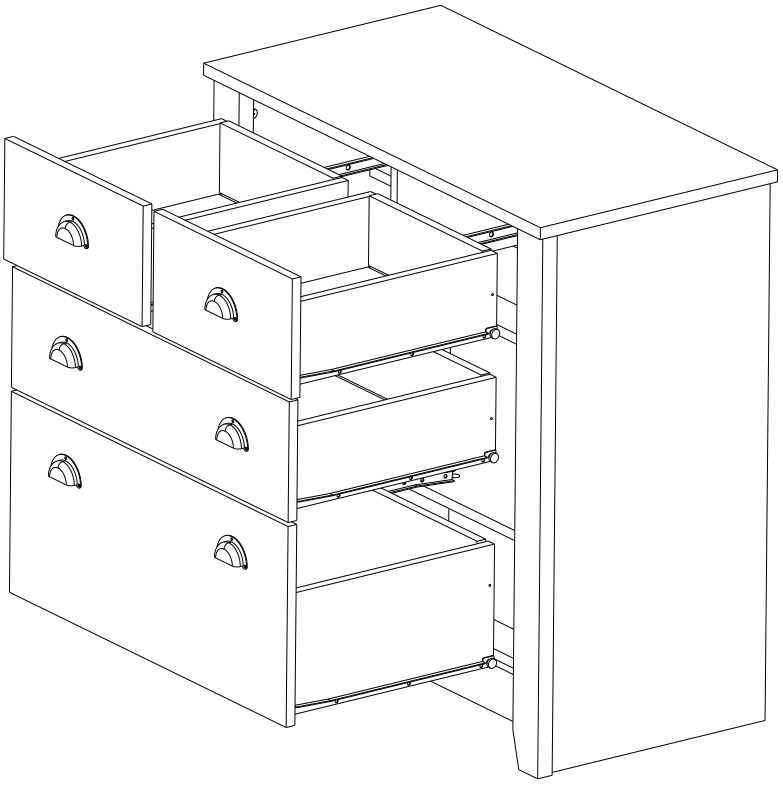

STEP 30

PARTS REQUIRED

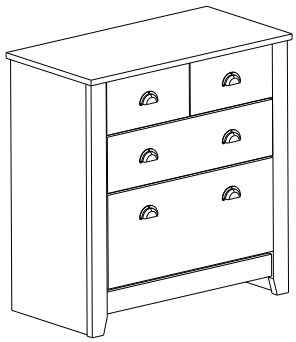

HARDWARE REQUIRED

Q	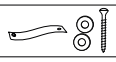	01

TOOLS REQUIRED

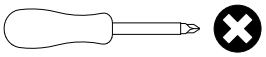

WARNING

Serious or fatal injuries can occur from furniture tipping over. To prevent the furniture from tipping over we recommend that it is permanently fixed to the wall.

Wall fixings are not supplied with this product as different wall materials require different types of fixing devices.
Please make sure you use fixings suitable for the walls in your home.

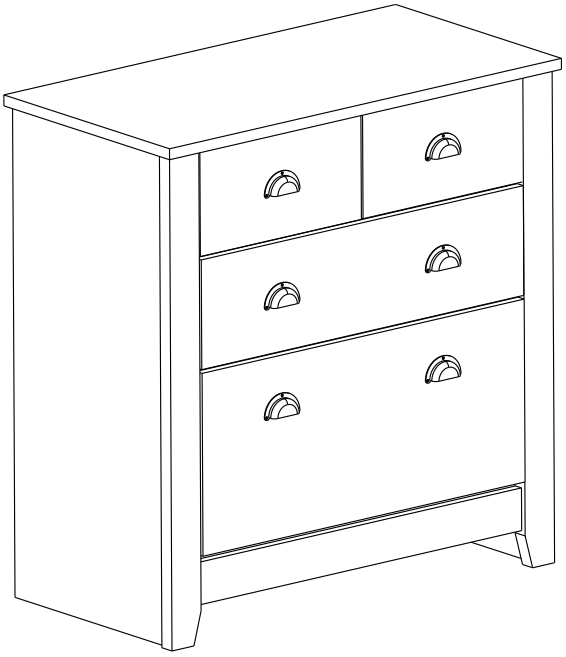

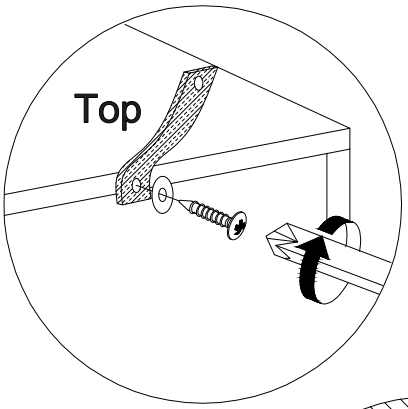

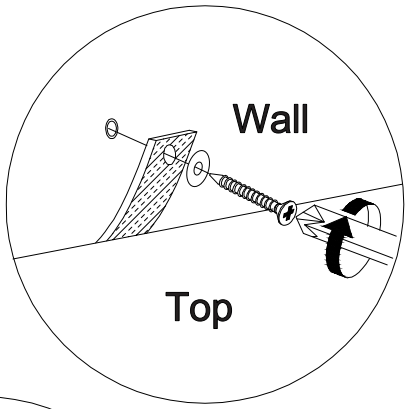

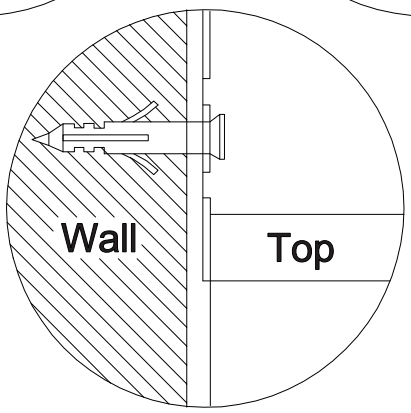

LUDLOW BEDSIDE
WHITE
ASSEMBLY INSTRUCTIONS

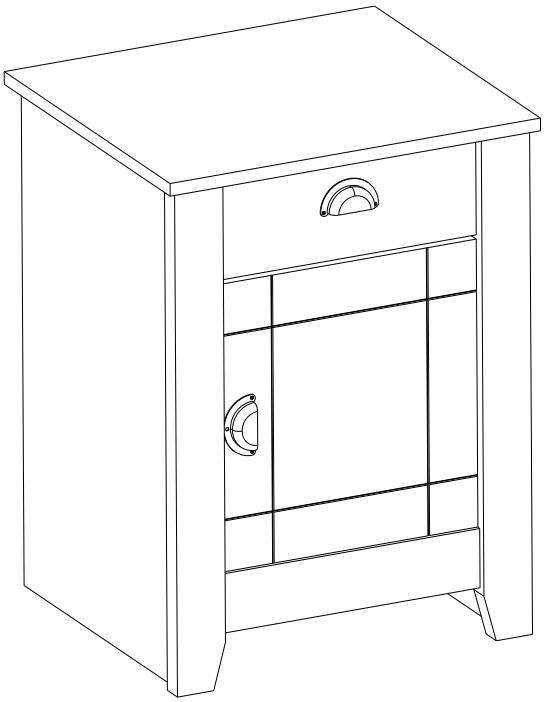

IMPORTANT

FOR DOMESTIC USE ONLY

PLEASE READ BEFORE YOU CONTINUE FURTHER

CARE AND MAINTENANCE

After unpacking this product please keep the original packaging in case it needs to be returned for any reason.
- Please ensure all fittings and parts are present before commencing with assembly.
- Never drag or push products as this could cause damage to the joints making it inferior.
- We strongly recommend that you keep children away from your work area.
- We recommend that you lay a blanket or sheet on the floor to avoid damage to both your floor and the product.
- Assemble this product as close to its final position as possible.
- Do not place this product next to a radiator or in direct sunlight.
- Do not drag or push items across your high gloss furniture as this may cause the surface to scratch
- Wood is a natural product and may expand if subjected to damp and may shrink or crack if subjected to heat. Therefore it is recommended that room temperature is maintained, with no sudden temperature fluctuations.
- Make sure any spillage is wiped off immediately.
- Do not place hot or chilled items directly on to the surface, use a place mat or marking will occur.
- For general cleaning use a soft cotton or micro fibre cloth, and do not use detergents of any kind.
- From time to time it may be necessary to tighten fittings, regular inspections should be carried out.
- Do not place on a wet or damp floor as staining may occur to your floor.

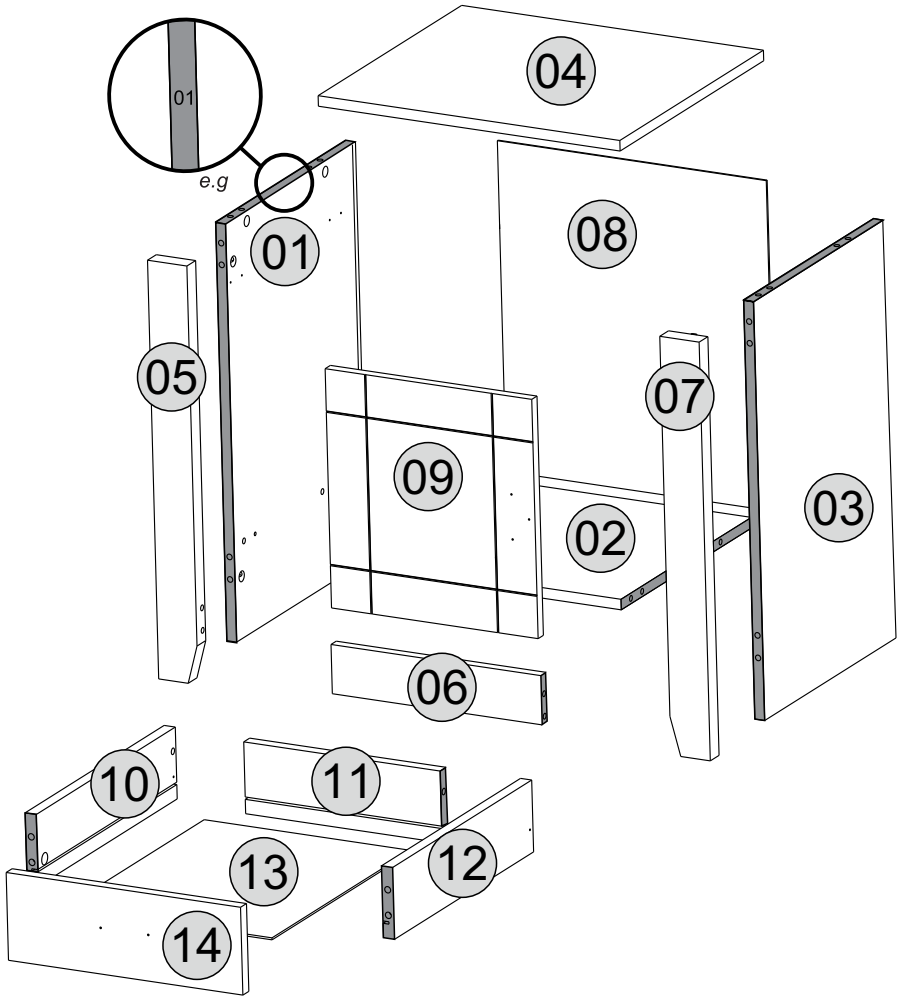

TOOLS REQUIRED

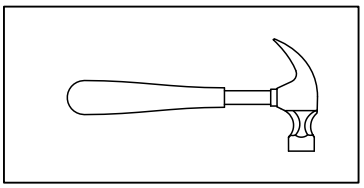

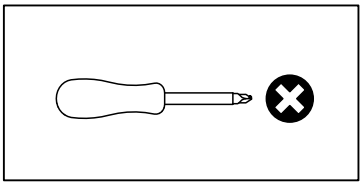

PARTS LIST

Please Note:
The below parts have been stamped with the part number to help identify them during assembly.

Part Number	Part Code	Part Description	Quantity	Carton
01	S100-103-041-DV1-01	Left Side Panel	1	1/1
02	S100-103-041-DV1-02	Base Panel	1	1/1
03	S100-103-041-DV1-03	Right Side Panel	1	1/1
04	S100-103-041-DV1-04	Top Panel	1	1/1
05	S100-103-041-DV1-05	Front Left Upright	1	1/1
06	S100-103-041-DV1-06	Crossbeam	1	1/1
07	S100-103-041-DV1-07	Front Right Upright	1	1/1
08	S100-103-041-DV1-08	Back	1	1/1
09	S100-103-041-DV1-09	Door	1	1/1
10	S100-103-041-DV1-10	Left Drawer Side	1	1/1
11	S100-103-041-DV1-11	Drawer Back	1	1/1
12	S100-103-041-DV1-12	Right Drawer Side	1	1/1
13	S100-103-041-DV1-13	Drawer Base	1	1/1
14	S100-103-041-DV1-14	Drawer Front	1	1/1

FITTINGS LIST

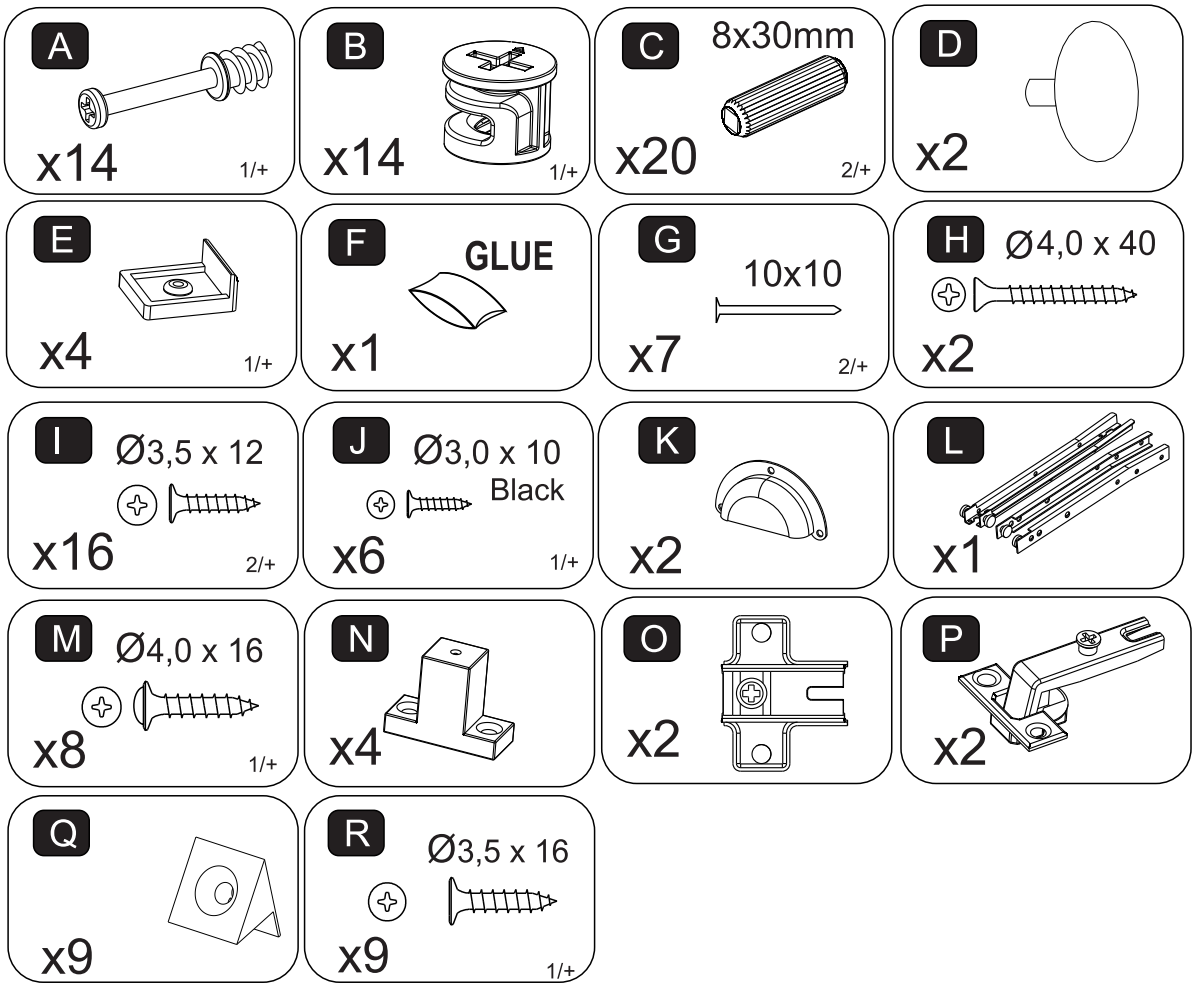

TIPS FOR FITTING CAM-LOCKS

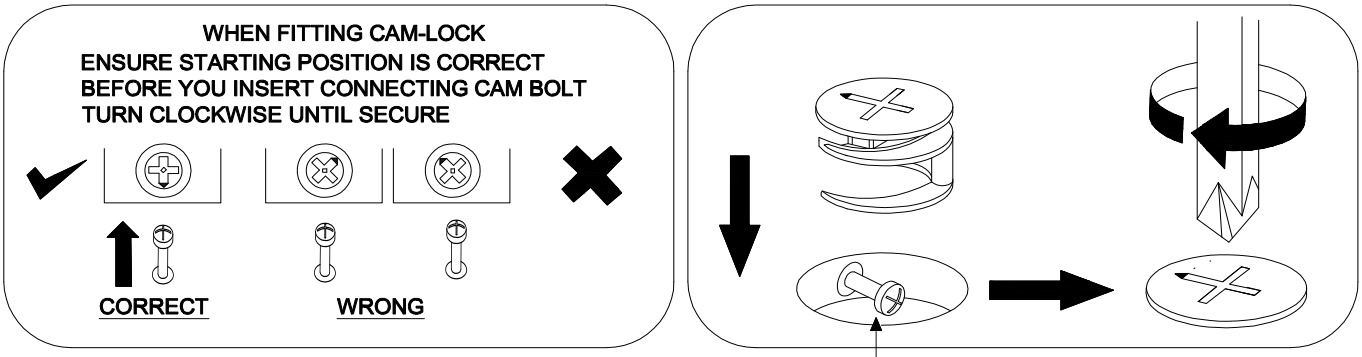

Cam bolt head needs to be in centre

CAMBOLT

Tighten until shoulder is flush with panel. Do not overtighten or undertighten (see example below)

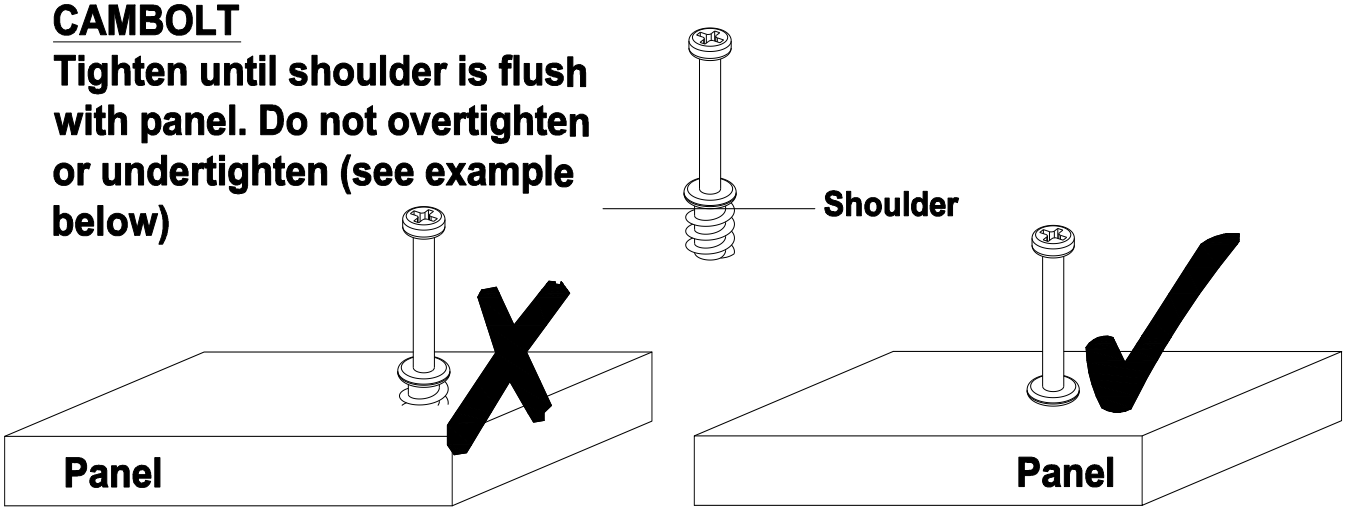

STEP 1

PARTS REQUIRED

01- LEFT SIDE PANEL	x1
03- RIGHT SIDE PANEL	x1

HARDWARE REQUIRED

C	Ø8 x 30mm	08
F	GLUE	01

TOOLS REQUIRED

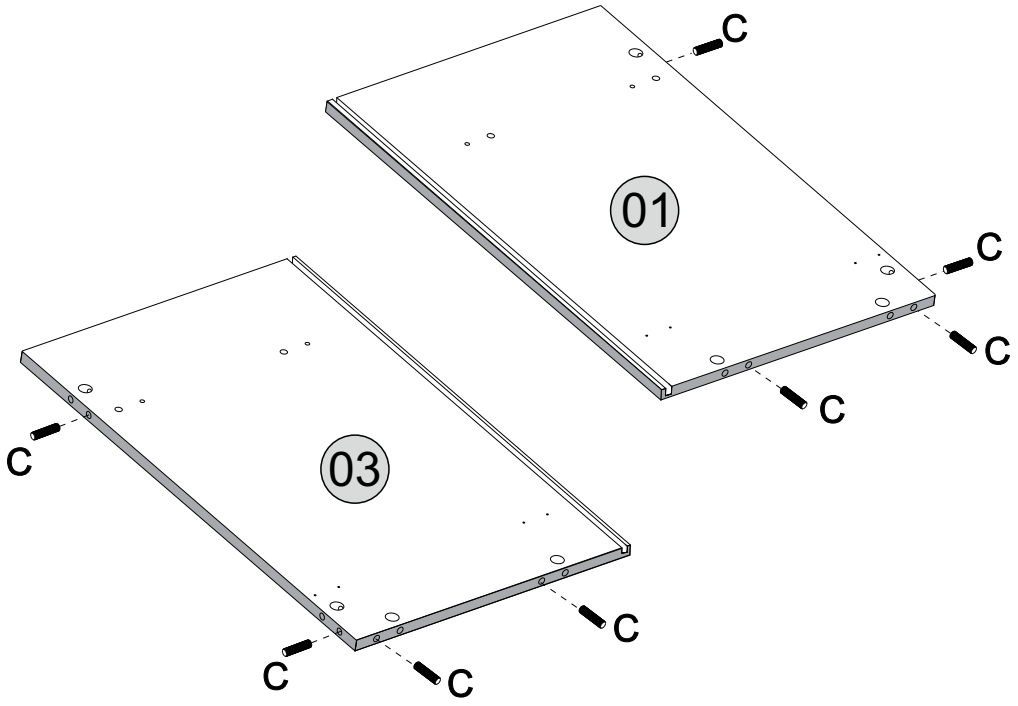

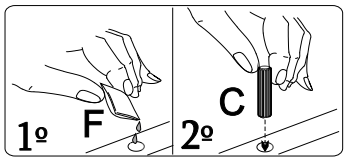

Glue must be added to the dowel holes on part 01 and 03.

STEP 2

PARTS REQUIRED

02- BASE PANEL	x1
06- CROSSBEAM	x1

HARDWARE REQUIRED

C	Ø8 x 30mm	08
F	GLUE	01

TOOLS REQUIRED

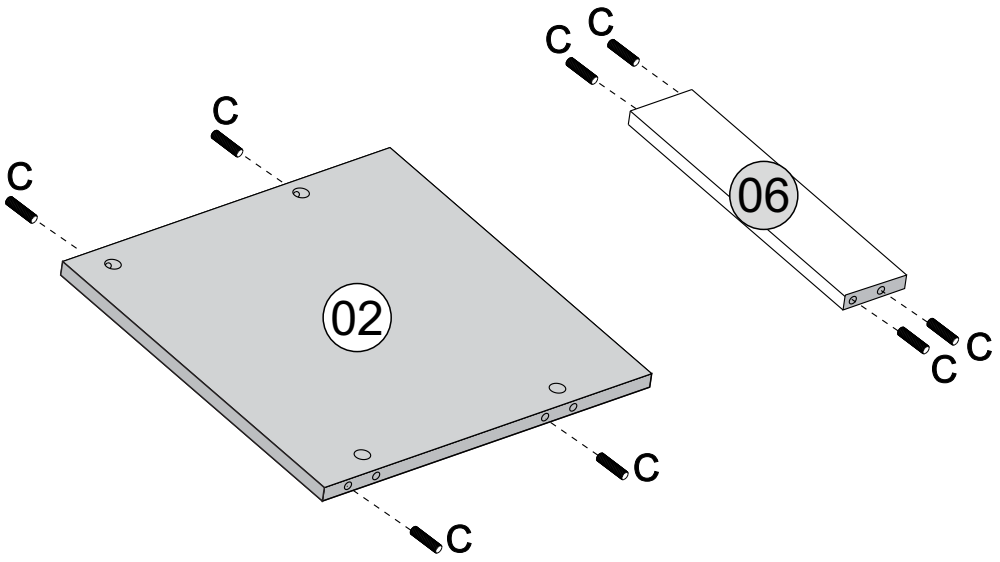

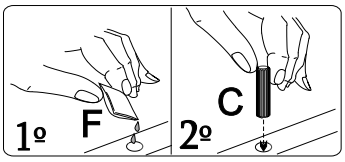

Glue must be added to the dowel holes on part 02 and 06.

STEP 3

PARTS REQUIRED

01- LEFT SIDE PANEL	x1

HARDWARE REQUIRED

E		02
G	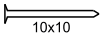 10x10	02
M	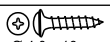 Ø 4,0 x 16mm	04
N		02

TOOLS REQUIRED

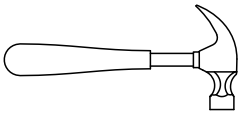

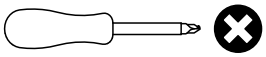

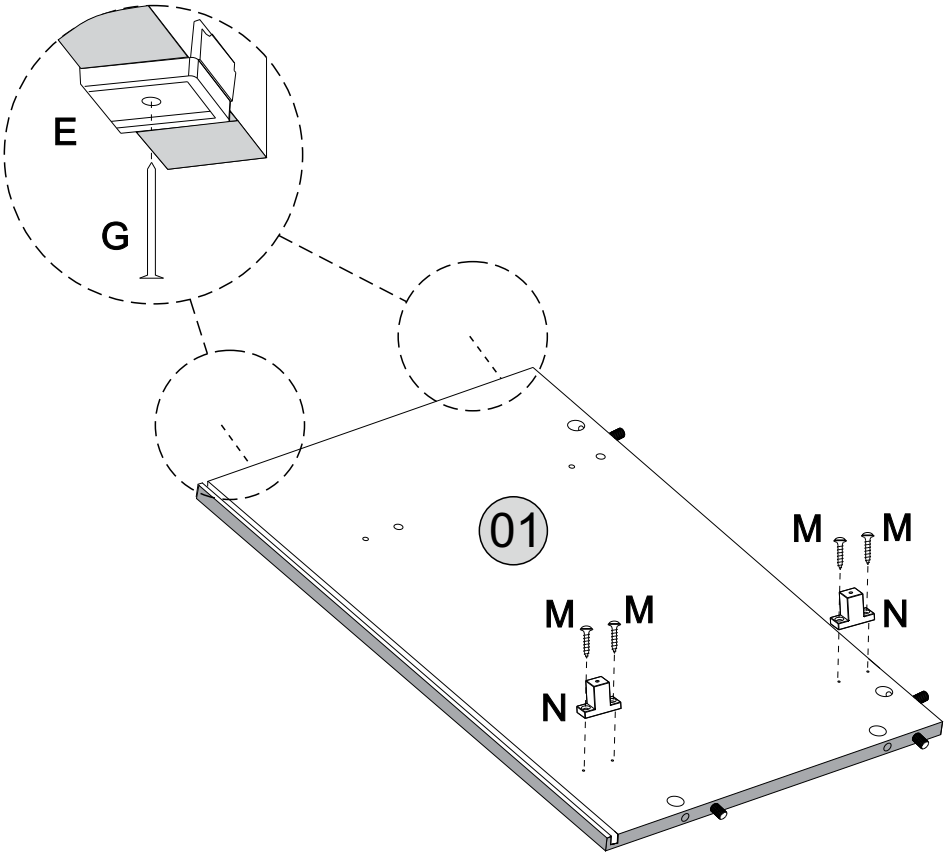

STEP 4

PARTS REQUIRED

01- LEFT SIDE PANEL	x1

HARDWARE REQUIRED

A	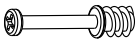	02
I	Ø 3,5 x 12mm	02
L		01

TOOLS REQUIRED

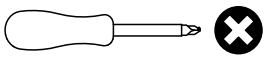

To Assemble the Drawer Slide, Please Follow Step as Below

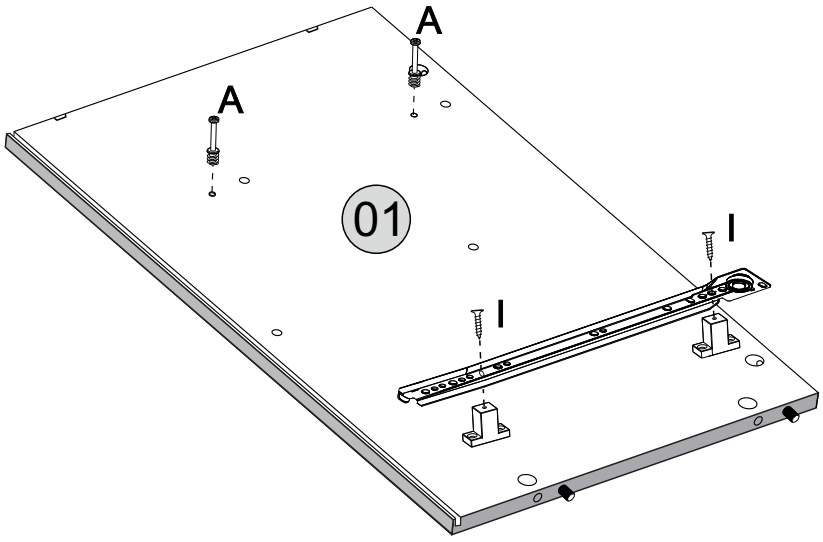

STEP 5

PARTS REQUIRED

03- RIGHT SIDE PANEL	x1

HARDWARE REQUIRED

E		02
G	10x10	02
M	Ø 4,0 x 16mm	04
N		02

TOOLS REQUIRED

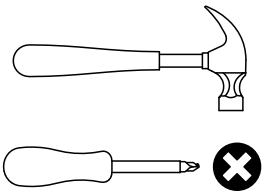

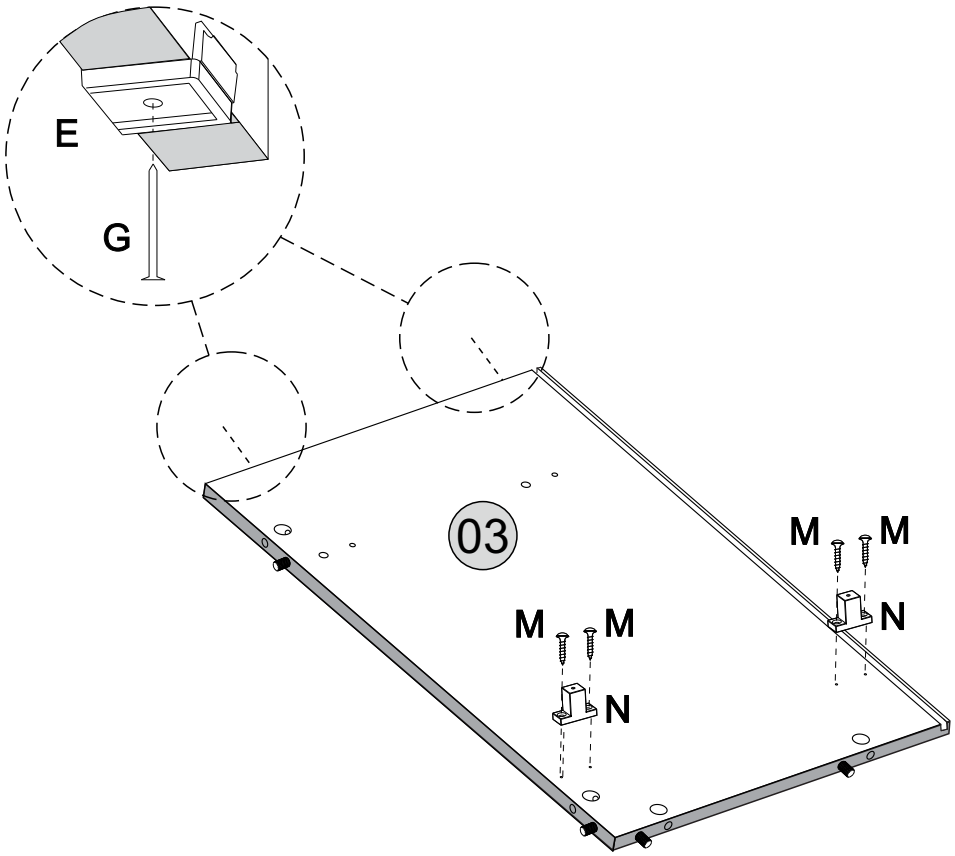

STEP 6

PARTS REQUIRED

03- RIGHT SIDE PANEL	x1

HARDWARE REQUIRED

A		02
I	Ø 3,5 x 12mm	02
L		01

TOOLS REQUIRED

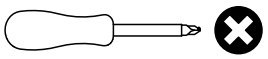

To Assemble the Drawer Slide, Please Follow Step as Below

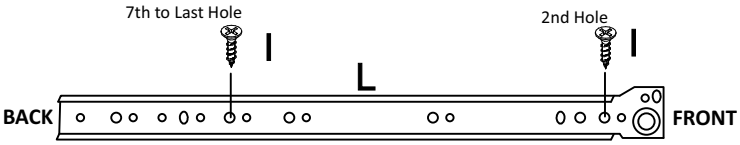

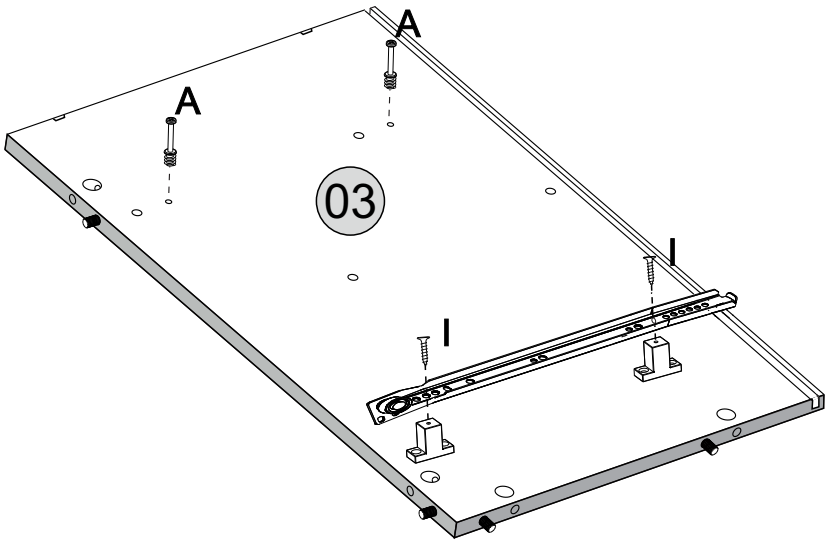

STEP 7

PARTS REQUIRED

05- FRONT LEFT UPRIGHT	x1
07- FRONT RIGHT UPRIGHT	x1

HARDWARE REQUIRED

A	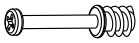	04
I	Ø 3,5 x 12mm	04
O		02

TOOLS REQUIRED

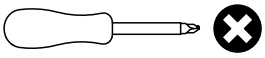

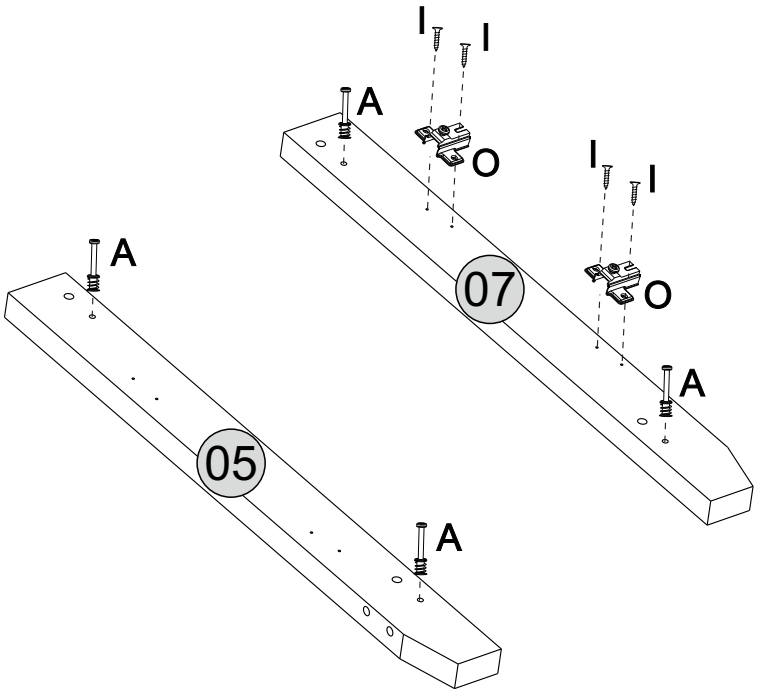

Please Note:
Depending on which side you would like the door to open from, please attach the hinge brackets (O) to either ‘Part 05' or ‘Part 07'.

STEP 8

PARTS REQUIRED

04- TOP PANEL	x1
14- DRAWER FRONT	x1

HARDWARE REQUIRED

A	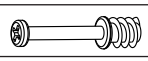	06

TOOLS REQUIRED

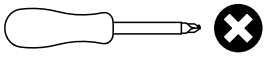

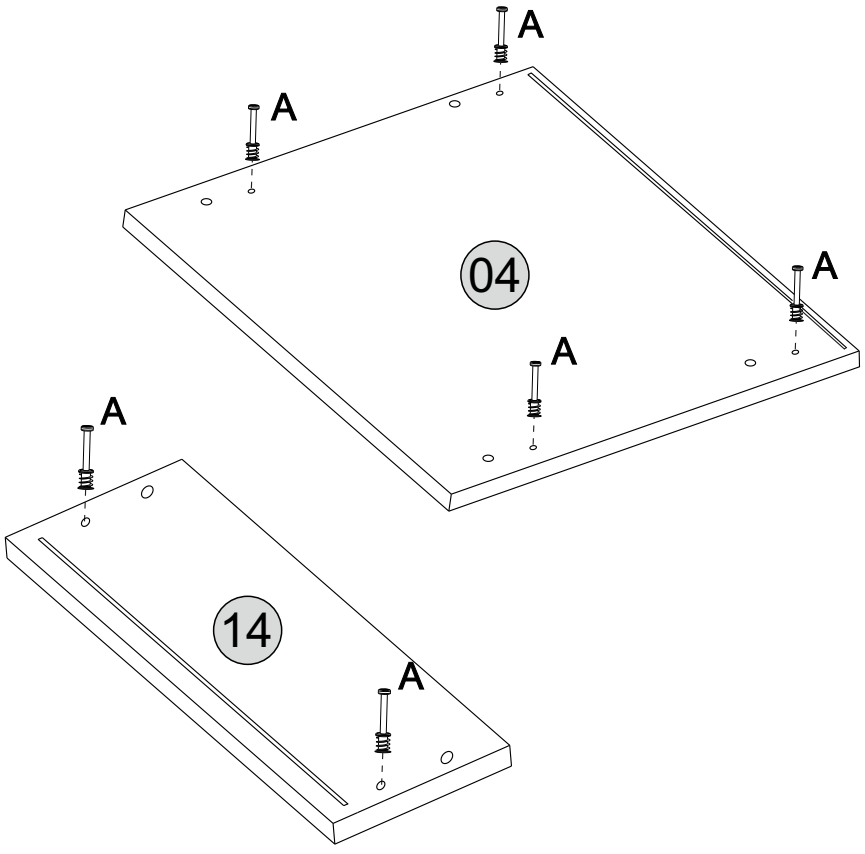

STEP 9

PARTS REQUIRED

01- LEFT SIDE PANEL	x1
02- BASE PANEL	x1
03- RIGHT SIDE PANEL	x1

HARDWARE REQUIRED

B		04
F	GLUE	01

TOOLS REQUIRED

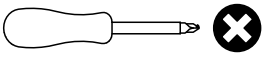

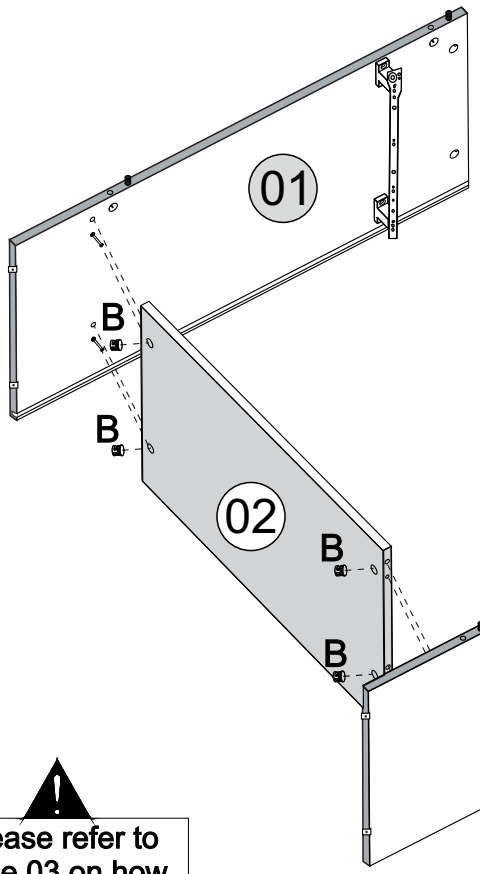

Glue must be added to the dowel holes on part 01 and 03.

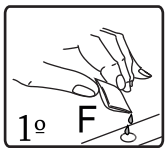

Please refer to page 03 on how to use cams correctly.

STEP 10

PARTS REQUIRED

04- TOP PANEL	x1

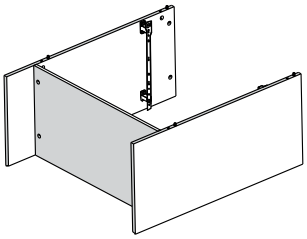

HARDWARE REQUIRED

B		04
F	GLUE	01

TOOLS REQUIRED

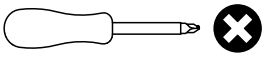

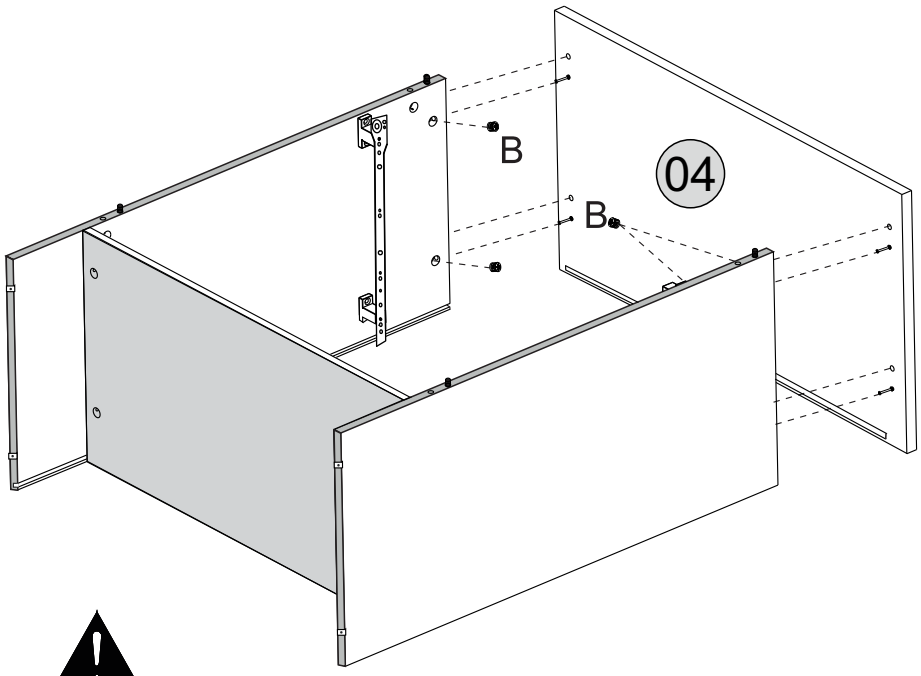

Glue must be added to the dowel holes on part 04.

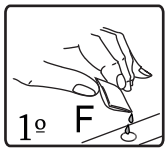

Please refer to page 03 on how to use cams correctly.

STEP 11

PARTS REQUIRED

05- FRONT LEFT UPRIGHT	x1
06- CROSSBEAM	x1
07- FRONT RIGHT UPRIGHT	x1

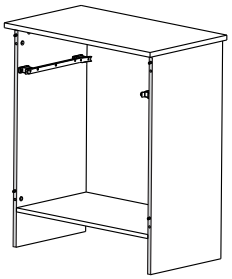

HARDWARE REQUIRED

B		04
F	GLUE	01

TOOLS REQUIRED

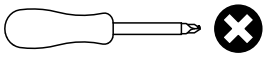

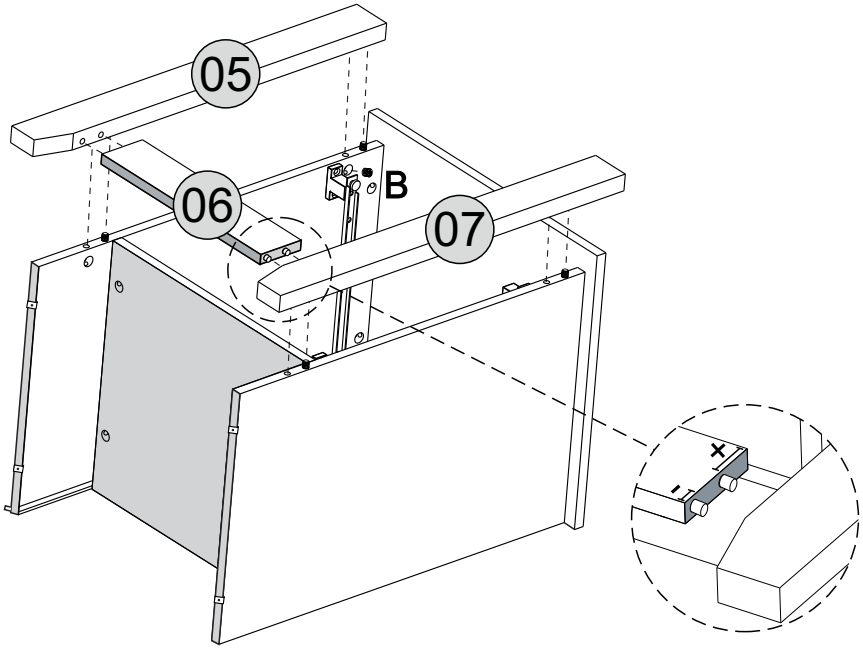

Please refer to page 03 on how to use cams correctly.

Glue must be added to the dowel holes on part 05 and 07.

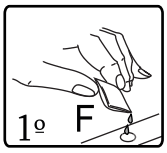

STEP 12

PARTS REQUIRED

09- DOOR	x1

HARDWARE REQUIRED

P		02
I	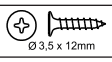 Ø 3,5 x 12mm	04
J	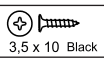 Ø 3,5 x 10 Black	03
K		01

TOOLS REQUIRED

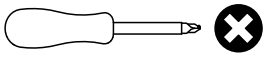

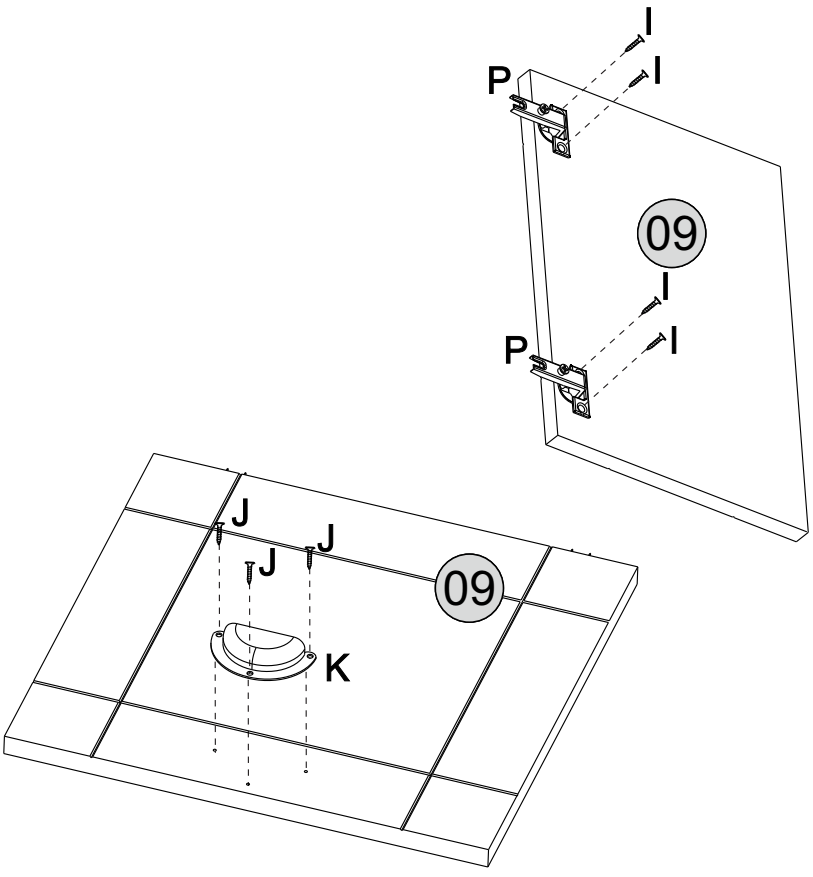

STEP 13

PARTS REQUIRED

09 - DOOR	x1

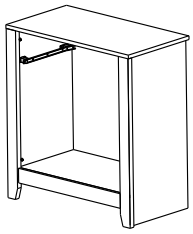

HARDWARE REQUIRED

TOOLS REQUIRED

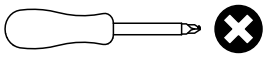

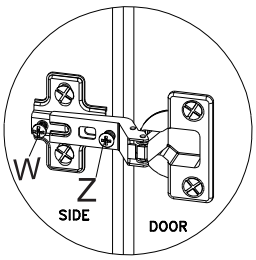

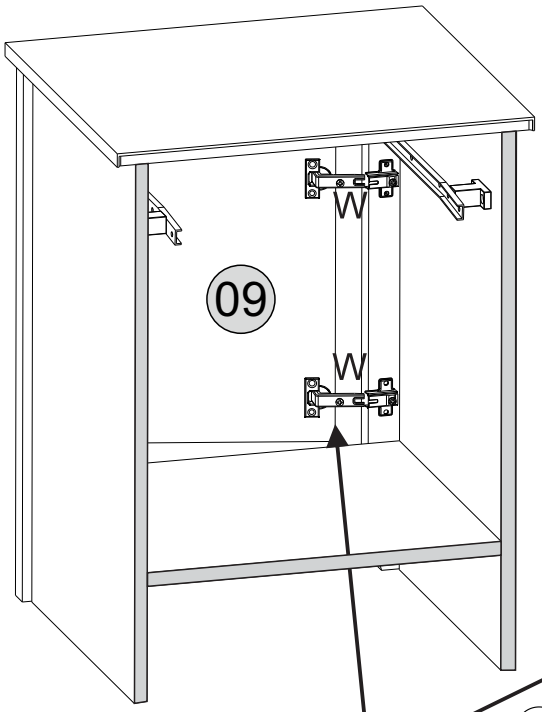

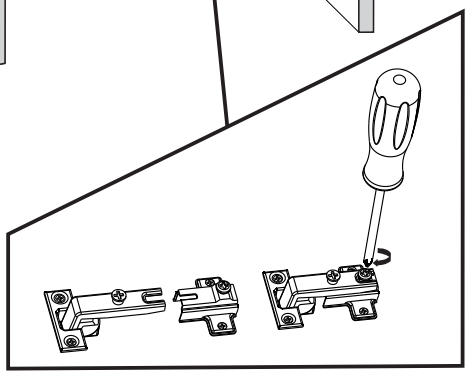

SHOULD THE DOORS OF YOUR BEDSIDE NOT APPEAR EVEN WHEN CLOSED THEY MAY NEED ADJUSTING. THIS CAN BE DONE AS FOLLOWS: LOOSEN SCREW (W) A LITTLE. BY TURNING SCREW (Z) EITHER CLOCKWISE OR ANTICLOCKWISE (IN OR OUT) THE HINGE CAN BE ADJUSTED AND THE DOOR CORRECTLY ALIGNED. IF MORE THAN ONE HINGE NEEDS ATTENTION PLEASE ADJUST ONE AT A TIME. IF IN DOUBT PLEASE SEEK PROFESSIONAL HELP.

STEP 14

PARTS REQUIRED

08 - BACK PANEL	x1

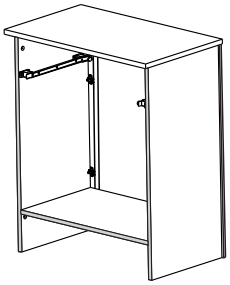

HARDWARE REQUIRED

TOOLS REQUIRED

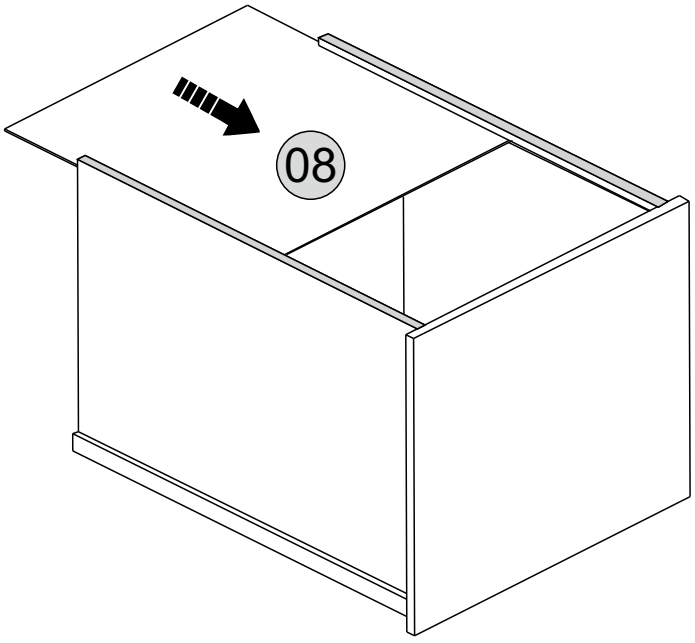

STEP 15

PARTS REQUIRED

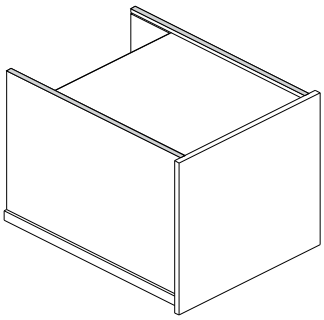

HARDWARE REQUIRED

G	10x10	03
Q		09
R		09

TOOLS REQUIRED

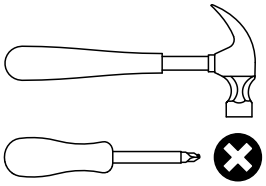

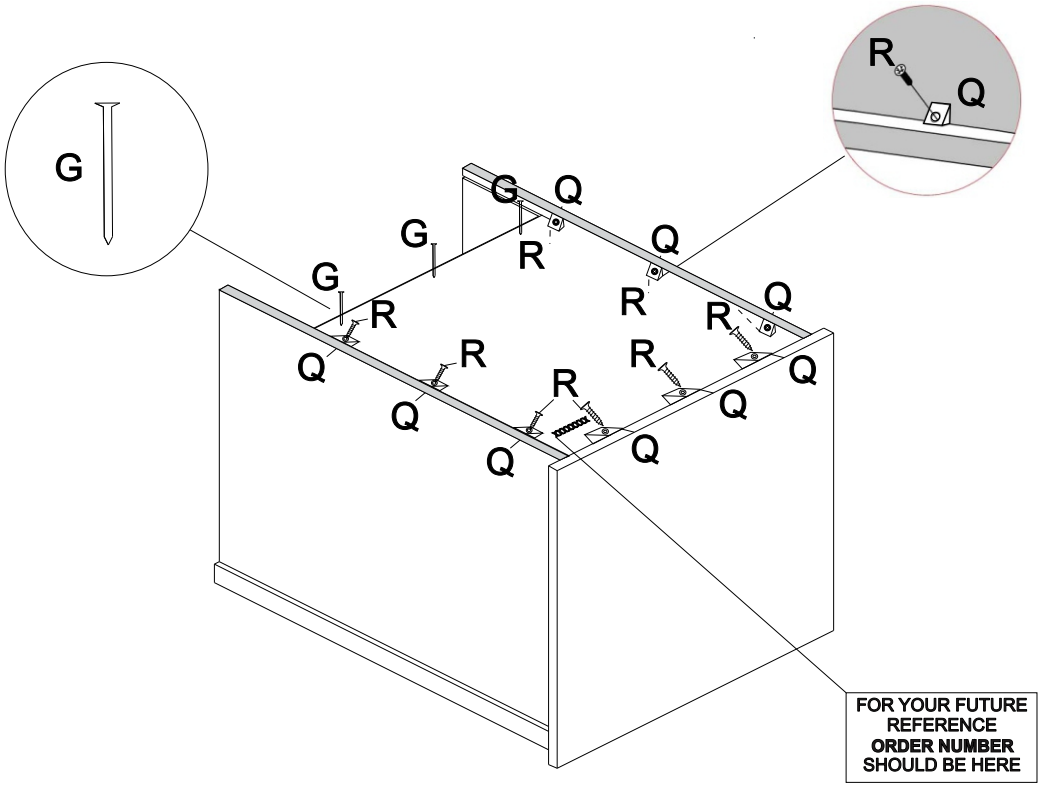

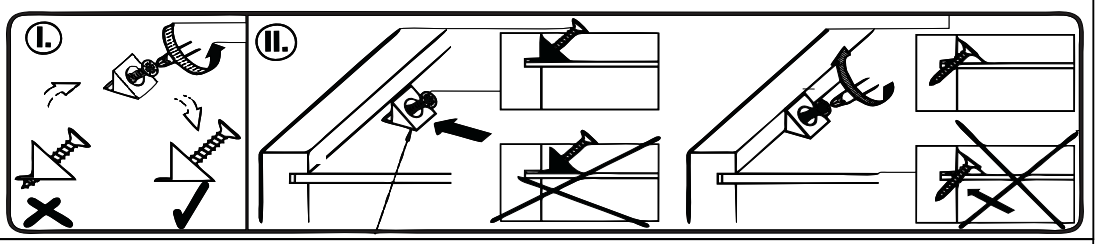

STEP 16

PARTS REQUIRED

10- LEFT DRAWER SIDE	x1
11- DRAWER BACK	x1
12- RIGHT DRAWER SIDE	x1

HARDWARE REQUIRED

C	Ø8 x 30	04
F	GLUE	01

TOOLS REQUIRED

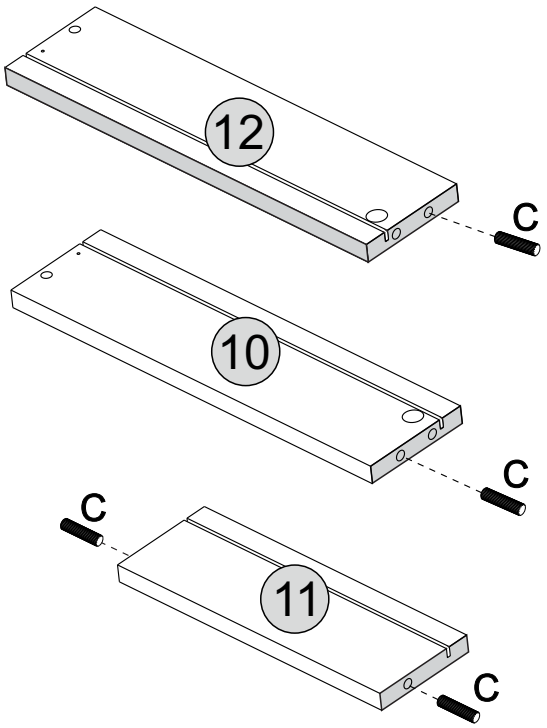

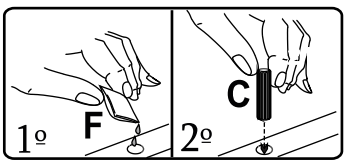

Glue must be added to the dowel holes on part 10, 11, 12

STEP 17

PARTS REQUIRED

10- LEFT DRAWER SIDE	x1
11- DRAWER BACK	x1
12- RIGHT DRAWER SIDE	x1

HARDWARE REQUIRED

H	Ø 4,0 x 40mm	02

TOOLS REQUIRED

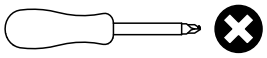

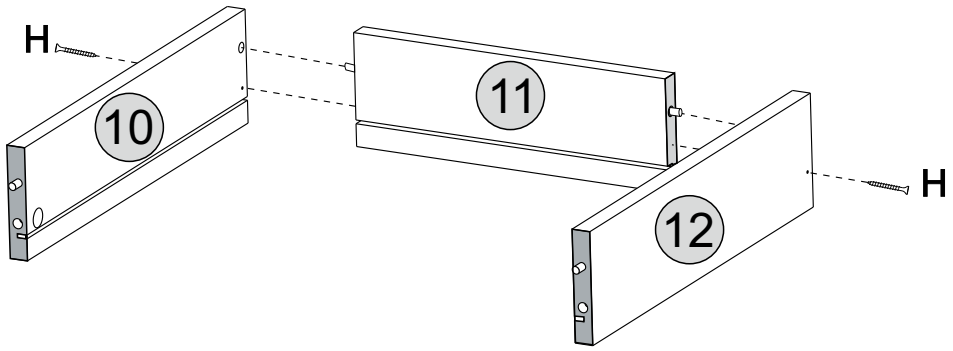

STEP 18

PARTS REQUIRED

13- DRAWER BASE	x1
14- DRAWER FRONT	x1

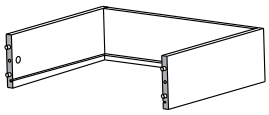

HARDWARE REQUIRED

B		02
J	Ø 3,5 x 10	03
K		01

TOOLS REQUIRED

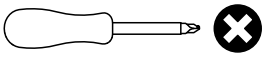

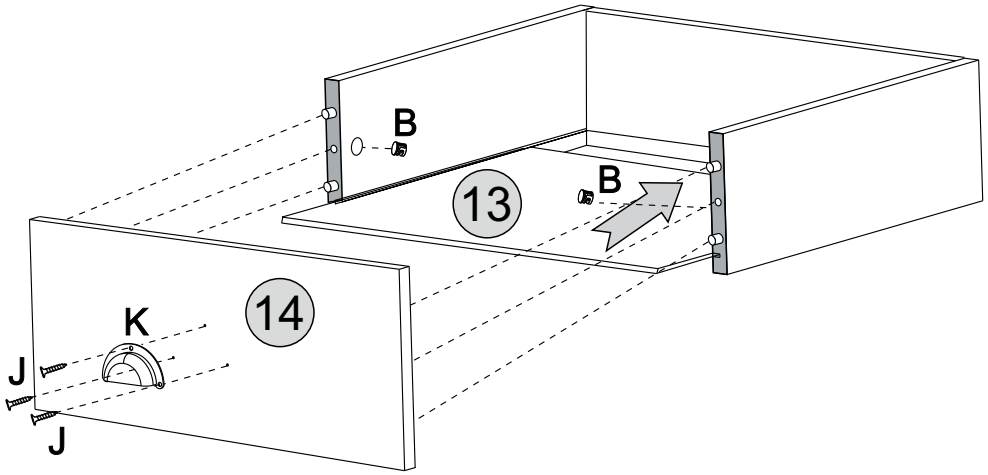

STEP 19

PARTS REQUIRED

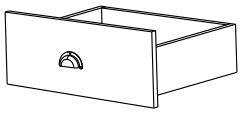

HARDWARE REQUIRED

I	Ø 3,5 x 12mm	04
D		02
L		01

TOOLS REQUIRED

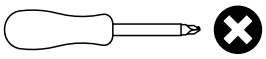

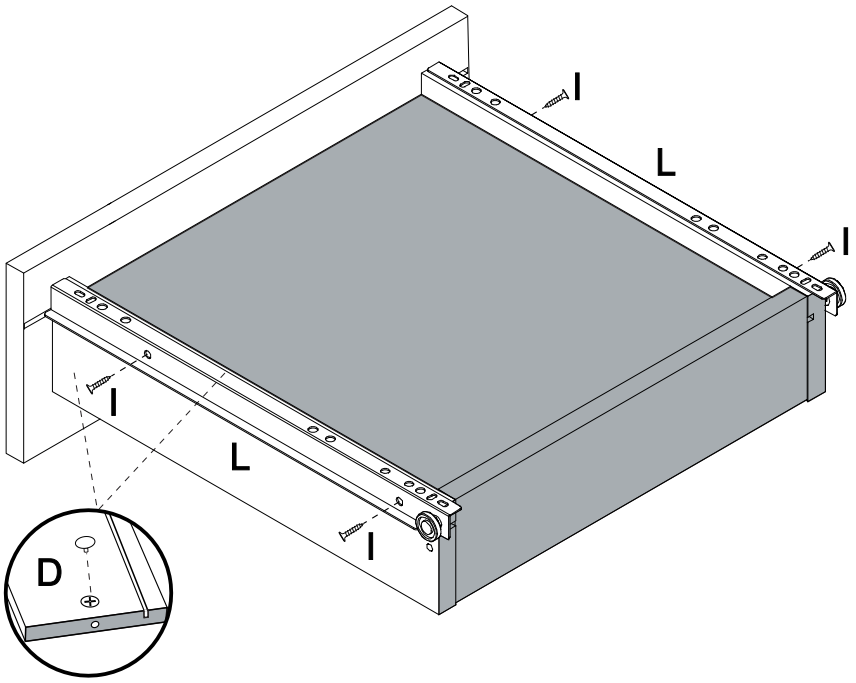

STEP 20
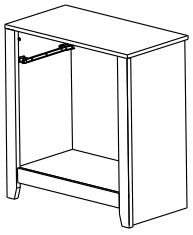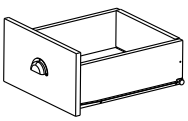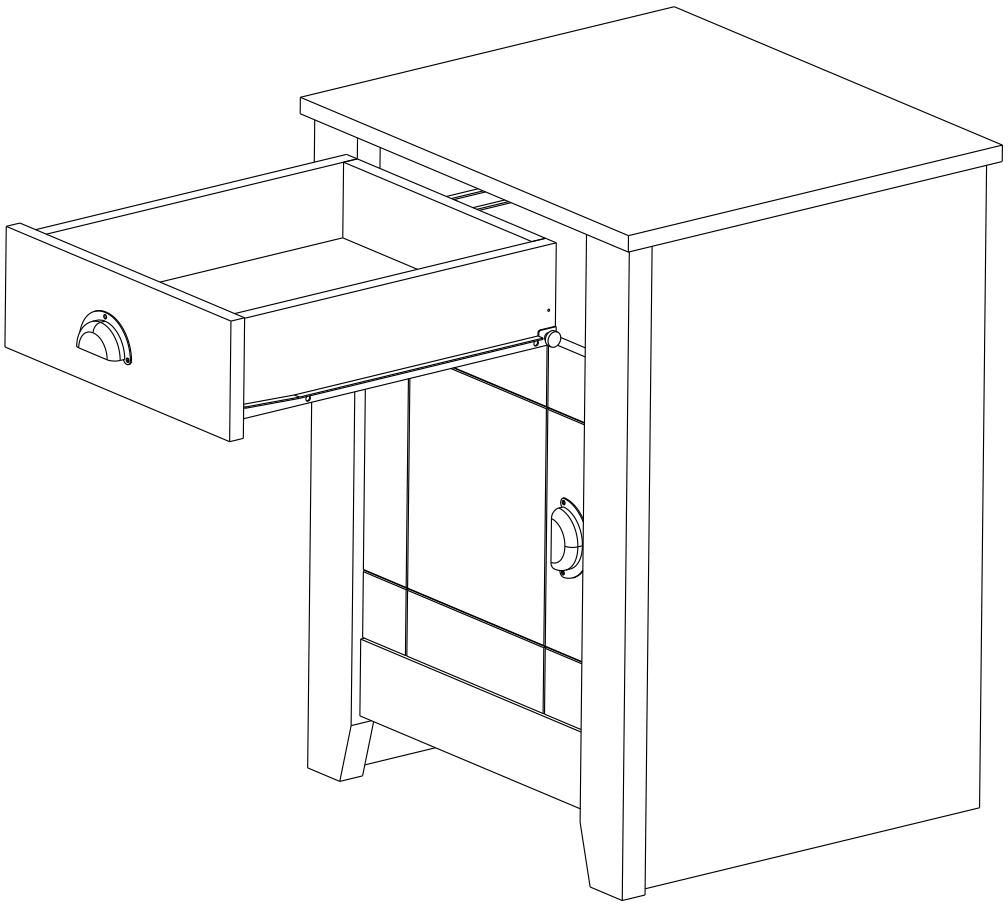
PARTS REQUIRED