Panama 5 Drawer Narrow Chest

ASSEMBLY INSTRUCTIONS

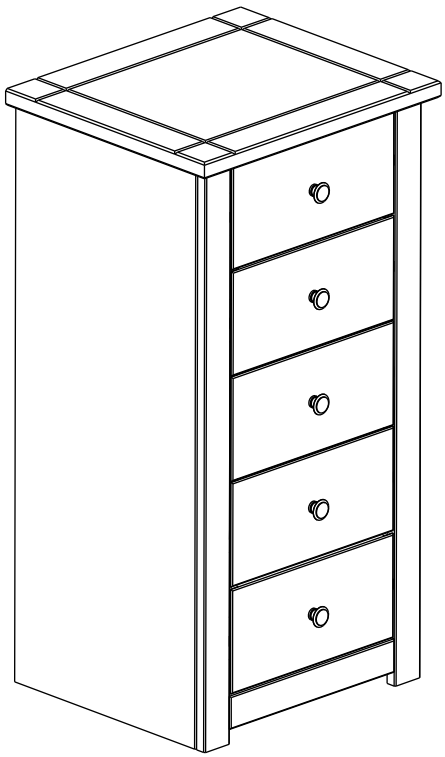

IMPORTANT

PLEASE READ BEFORE YOU CONTINUE FURTHER

FOR DOMESTIC USE ONLY

CARE AND MAINTENANCE

After unpacking this product please keep the original packaging in case it needs to be returned for any reason.

- Please ensure all fittings and parts are present before commencing with assembly.
- We recommend that you lay a blanket or sheet on the floor to avoid damage to both your floor and the product.
- We strongly recommend that you keep children away from your work area.
- Assemble this product as close to its final position as possible.
- Never drag or push products as this could cause damage to the joints making it inferior.
- Do not place this product next to a radiator or in direct sunlight.
- Wood is a natural product and may expand if subjected to damp and may shrink or crack if subjected to heat. Therefore it is recommended that room temperature is maintained, with no sudden temperature fluctuations.
- Make sure any spillage is wiped off immediately.
- Do not place hot or chilled items directly on to the surface, use a place mat or marking will occur.
- For general cleaning use a duster, and do not use detergents of any kind. However, the surface will need to be retreated from time to time. This can be done by using block wax (unperfumed) and rubbing it over the whole item.
- From time to time it may be necessary to tighten fittings, regular inspections should be carried out.

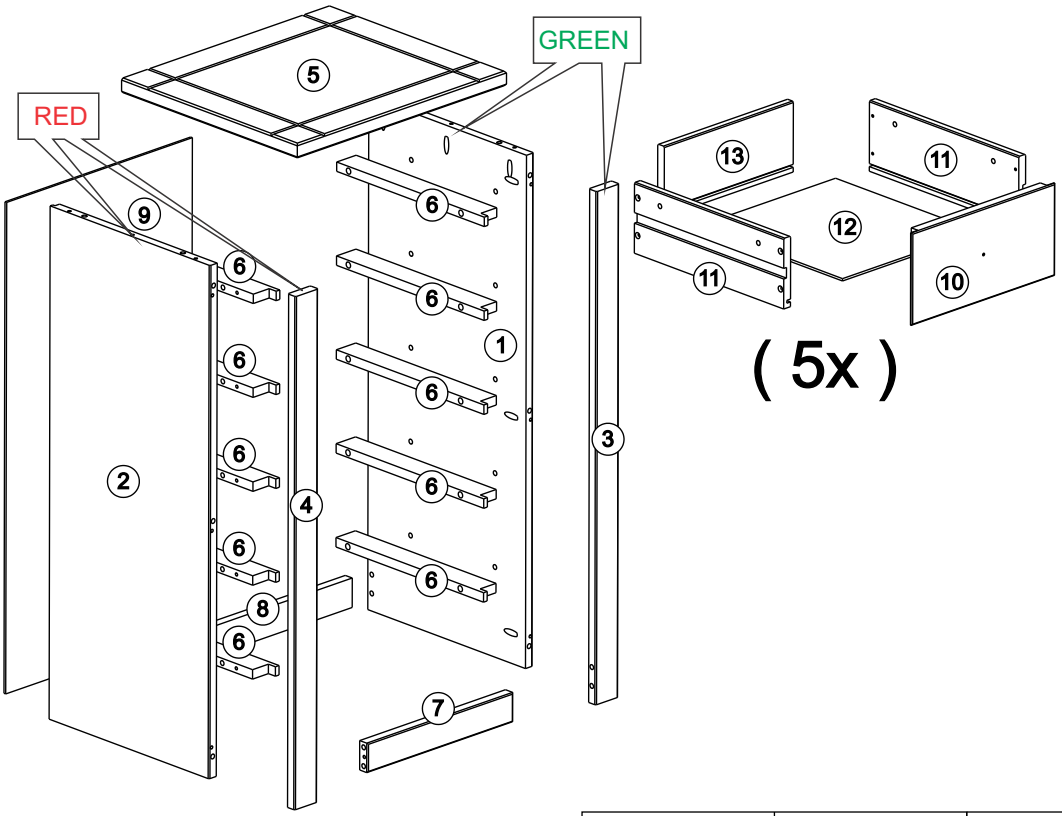

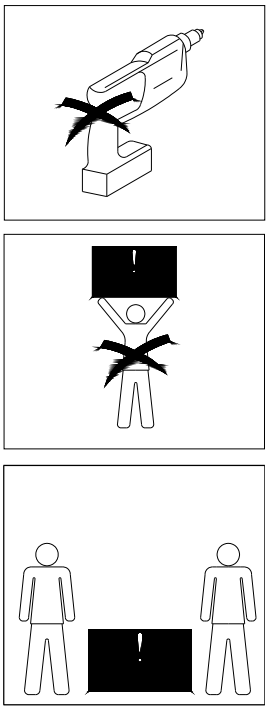

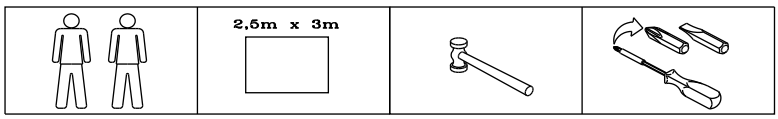

*Use of power tools to assemble this product will invalidate any claim and could damage this product making it unsafe!!!
*Please assemble on a clean soft surface to avoid damage.

*Please check contents and read the instructions before commencing assembly.
*Assemble this product following the enclosed instructions carefully.
*Please take care to avoid damaging parts during assembly.

PARTS LIST

Part Number	Part Code	Part Description	Quantity	Carton
01	S100-102-044-RK1-01	Right Side Panel (green)	1	1/1
02	S100-102-044-RK1-02	Left side Panel (red)	1	1/1
03	S100-102-044-RK1-03	Right Front Upright (green)	1	1/1
04	S100-102-044-RK1-04	Left front Upright (red)	1	1/1
05	S100-102-044-RK1-05	Top Panel	1	1/1
06	S100-102-044-RK1-06	Drawer Runner	10	1/1
07	S100-102-044-RK1-07	Front Crossbeam	1	1/1
08	S100-102-044-RK1-08	Back Crossbeam	1	1/1
09	S100-102-044-RK1-09	Back Panel	1	1/1
10	S100-102-044-RK1-10	Drawer Front	5	1/1
11	S100-102-044-RK1-11	Drawer Side	10	1/1
12	S100-102-044-RK1-12	Drawer Bottom	5	1/1
13	S100-102-044-RK1-13	Drawer Back	5	1/1

FITTINGS

A	Ø 8 x 25mm	48	E	M4 x 25mm	05
B	Ø 3,5 x 30mm	36	F	10x10mm	17
C	Ø 3,0 x 30mm	40	G	Ø 3,5 x 16	03
D		05	H	2x 1x 1x	01

01

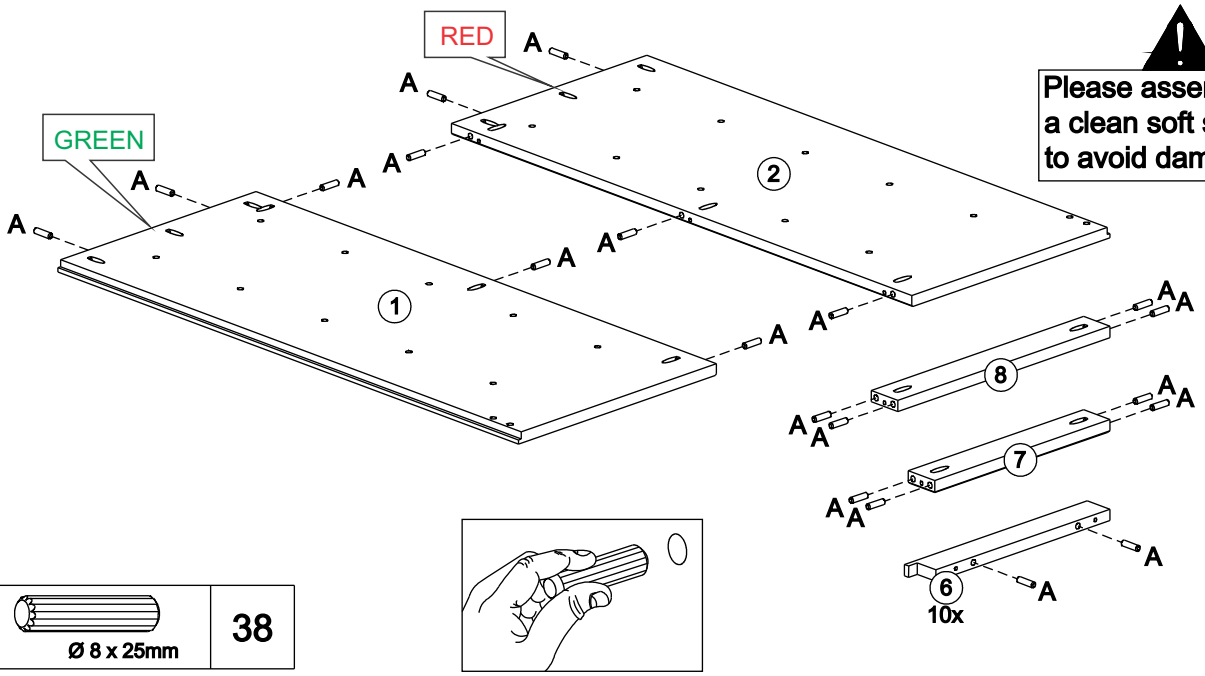

Please assemble on a clean soft surface to avoid damage.

A	Ø 8 x 25mm	38

02

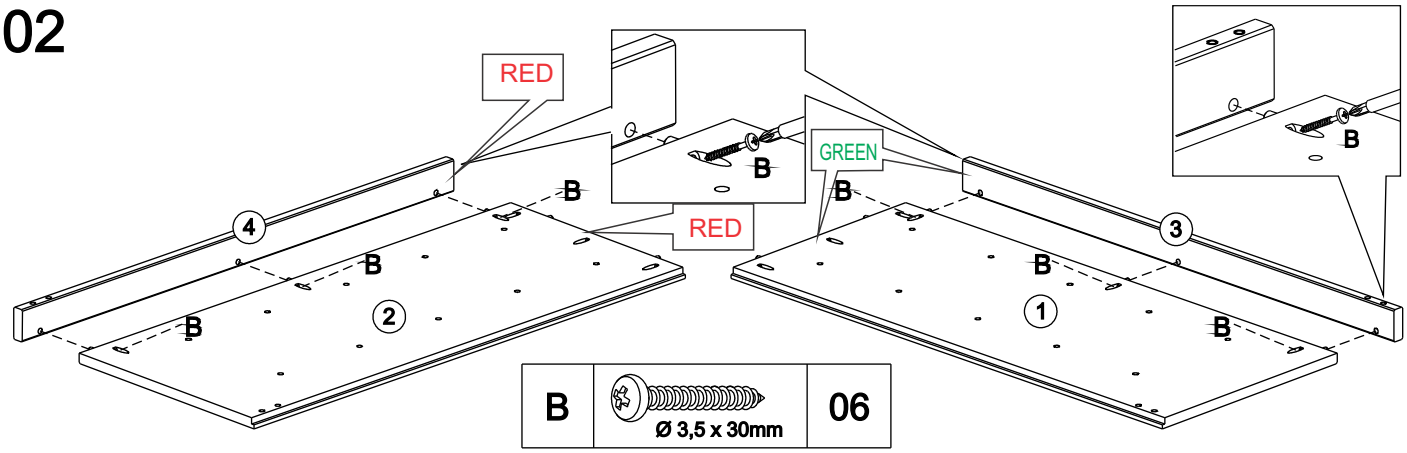

B	Ø 3,5 x 30mm	06

03

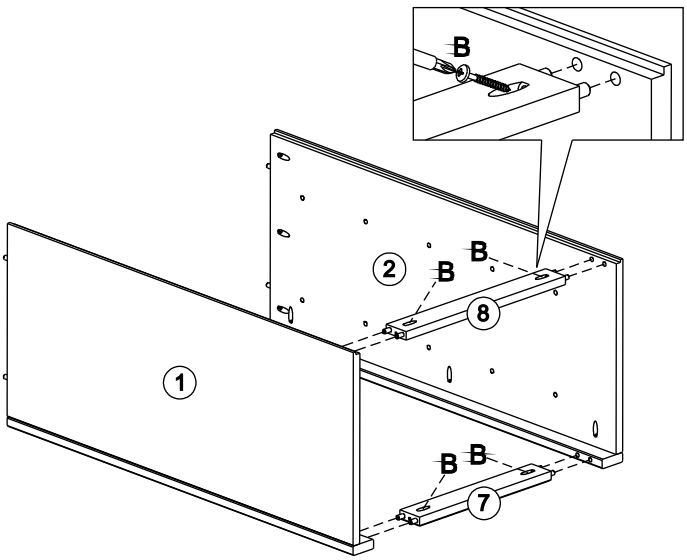

B	Ø 3,5 x 30mm	04

04

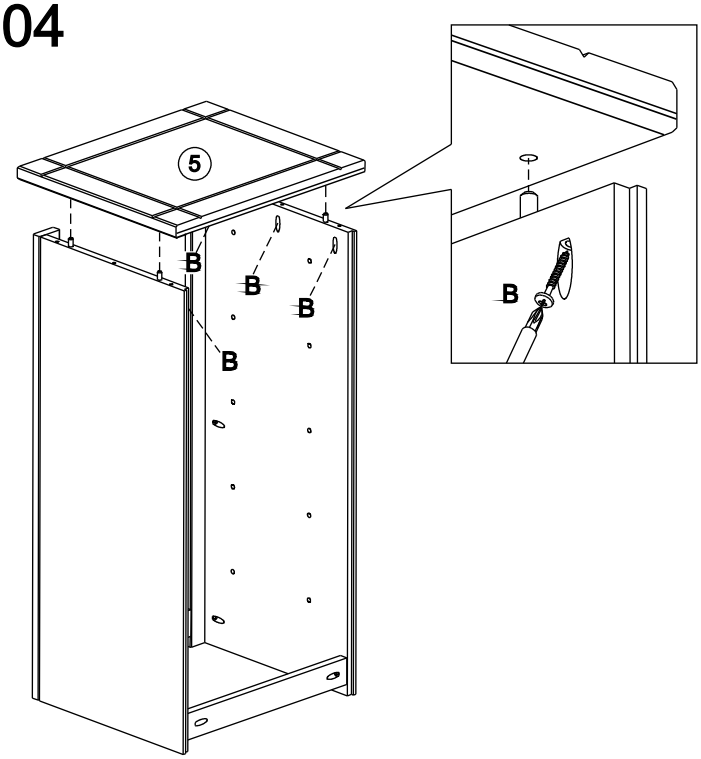

B	Ø 3,5 x 30mm	06

05

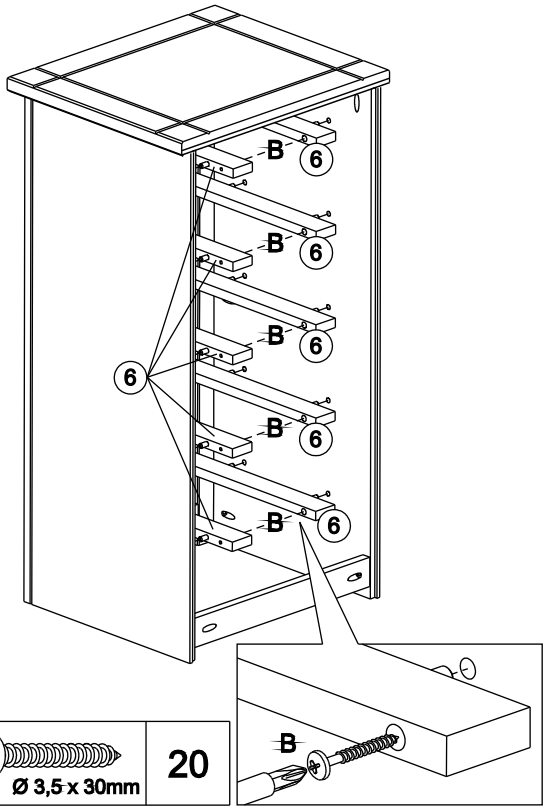

B	Ø 3,5 x 30mm	20

06

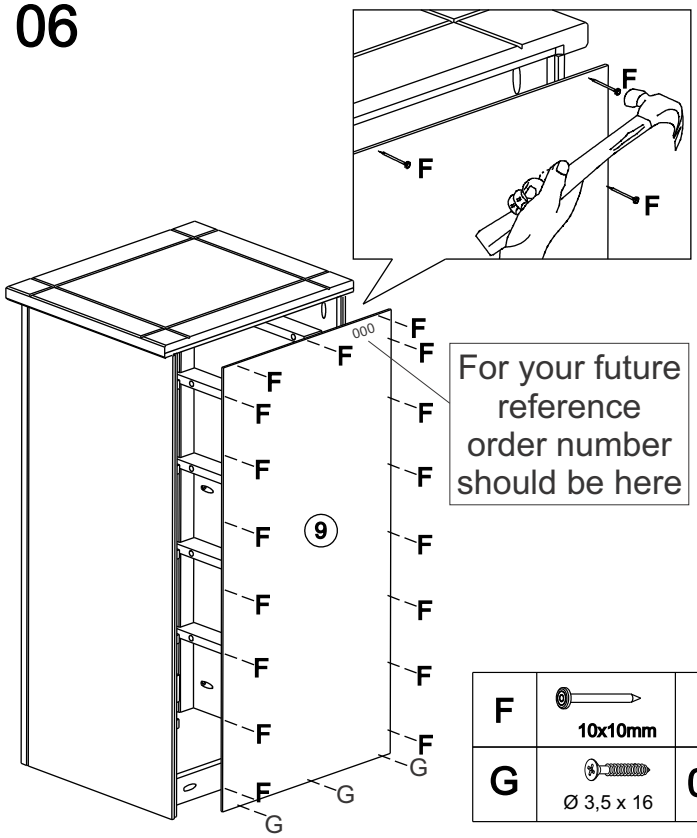

For your future reference order number should be here

F	10x10mm	17
G	Ø 3,5 x 16	03

07

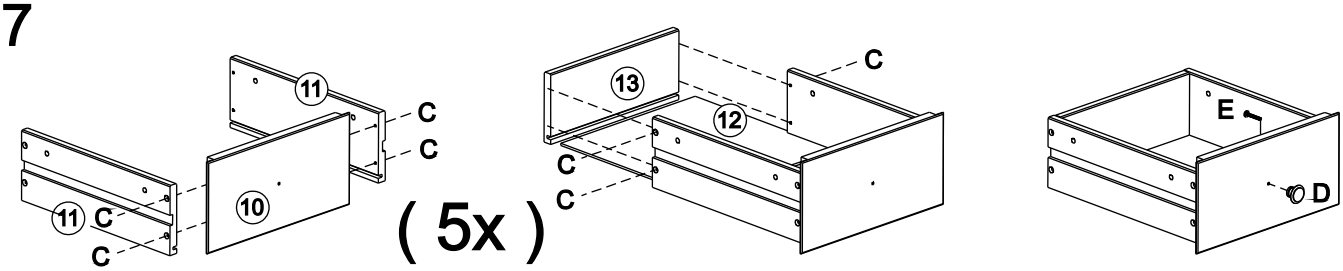

C	Ø 3,0 x 30mm	40
D		05
E	M4 x 25mm	05

08

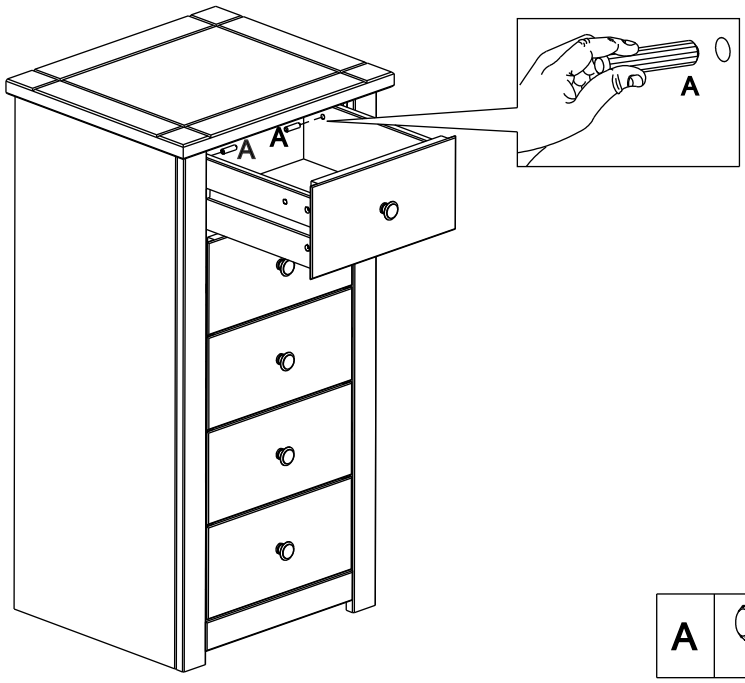

A	Ø 8 x 25mm	10

WARNING

Serious or fatal injuries can occur from furniture tipping over. To prevent the furniture from tipping over we recommend that it is permanently fixed to the wall.

Wall fixings are not supplied with this product as different wall materials require different types of fixing devices.
Please make sure you use fixings suitable for the walls in your home.

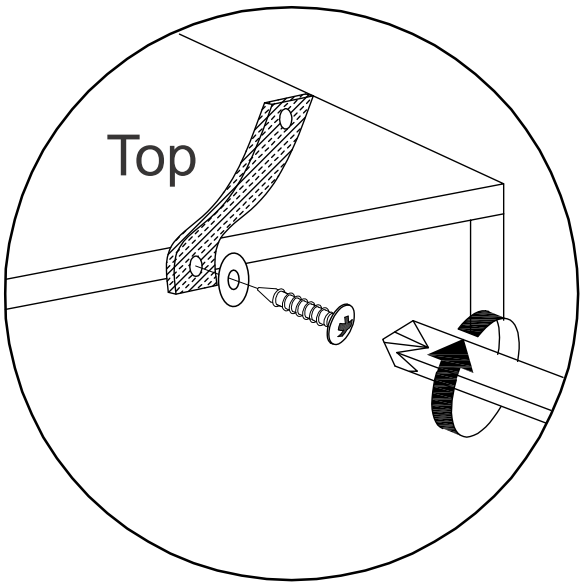

HARDWARE LIST

Strap (Anti-Tip Kit) (1x)

Wood Screw (Anti-Tip Kit) 3,5 x 25mm (1x)
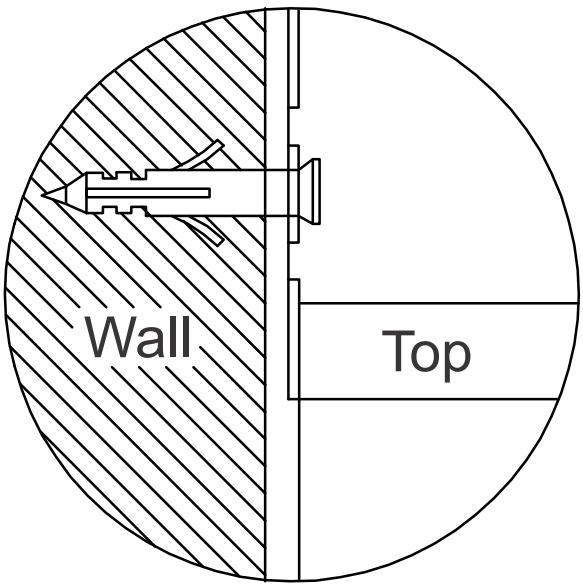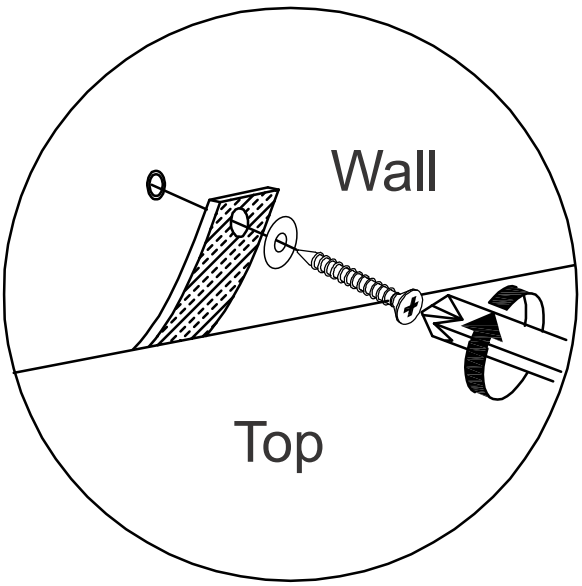
Washer (Anti-Tip Kit) (2x)